NORTH AVENUE HALF-PLEXES

905 NORTH AVENUE, SACRAMENTO, CALIFORNIA

06/02/2022

PLAN CHECK SET

ABBREVIATIONS

&	AND
@	AT
Ø	DIAMETER
#	NUMBER
A/C UNIT	AIR CONDITIONING UNIT
A.C.	ASPHALTIC CONCRETE
A.D.	AREA DRAIN
ADD'L.	ADDITIONAL
A.F.F.	ABOVE FINISHED FLOOR
A.F.G.	ABOVE FINISHED GRADE
A.H.U.	AIR HANDLING UNIT
ALUM.	ALUMINUM
ARCH.	ARCHITECTURAL
BD.	BOARD
BKG.	BACKING
BLDG.	BUILDING
BOT.	BOTTOM
BTWN.	BETWEEN
CAB.	CABINET
CEM.	CEMENT
CEM. PLAS.	CEMENT PLASTER
C.J.	CONSTRUCTION JOINT
CLG.	CEILING
CLR.	CLEAR
CL.	CLOSET
C.M.U.	CONCRETE MASONRY UNIT
CONC.	CONCRETE
CPT.	CARPET
CSWK.	CASEWORK
CTR.	CENTER
DBL.	DOUBLE
DET.	DETAIL
D.F.	DRINKING FOUNTAIN
DIA.	DIAMETER
DIM.	DIMENSION
DS.	DOWNSPOUT
DWG.	DRAWING
(E)	EXISTING
EA.	EACH
E.J.	EXPANSION JOINT
ELECT.	ELECTRIC
ELEV.	ELEVATOR
EQ.	EQUAL
EQUIP.	EQUIPMENT
E.W.	EACH WAY
EXP.	EXPANSION
EXT.	EXTERIOR
F.D.	FLOOR DRAIN
F.E.	FIRE EXTINGUISHER
F.E.C.	FIRE EXTINGUISHER CABINET
FIN.	FINISH
FLG.	FLOORING
FLR.	FLOOR
F.O.C.	FACE OF CONCRETE
F.O.F.	FACE OF FINISH
F.O.M.	FACE OF MASONRY
F.O.S.	FACE OF STUD
F.O.W.	FACE OF WALL
FP.	FIREPROOF
F.R.P.	FIBERGLASS REINFORCED PANEL
FT.	FOOT OR FEET
FTG.	FOOTING
G.	GAS
GA.	GAGE
GALV.	GALVANIZED
GLU. LAM.	GLUED LAMINATED WOOD
GYP.	GYPSUM
H.B.	HOSE BIBB
H.C.	HOLLOW CORE
HDWD.	HARDWOOD
HDW.	HARDWARE
H.M.	HOLLOW METAL
HORIZ.	HORIZONTAL
HT.	HEIGHT
INSUL.	INSULATION
INT.	INTERIOR
KIT.	KITCHEN
LAB.	LABORATORY
LAV.	LAVATORY
MAX.	MAXIMUM
MECH.	MECHANICAL
MEMB.	MEMBRANE
MFR.	MANUFACTURER
MIN.	MINIMUM
MISC.	MISCELLANEOUS
MTD.	MOUNTED
MTL.	METAL
N.I.C.	NOT IN CONTRACT
NO.	NUMBER
N.T.S.	NOT TO SCALE
O/	OVER
O.C.	ON CENTER
O.D.	OUTSIDE DIAMETER
O.F.C.I.	OWNER FURNISHED CONTRACTOR INSTALLED
OPP.H.	OPPOSITE HAND
OPNG.	OPENING
OPP.	OPPOSITE
P.L.	PROPERTY LINE
P.LAM.	PLASTIC LAMINATE
PLUMB.	PLUMBING
PLYWD.	PLYWOOD
PNT.	PAINT
PROP.	PROPERTY
P.S.F.	POUNDS PER SQUARE FOOT
P.S.I.	POUNDS PER SQUARE INCH
R.	RADIUS
R.	RISER
R.	REFRIGERATOR
R.D.	ROOF DRAIN
REBAR.	REINFORCING STEEL BAR
REF.	REFERENCE
REINF.	REINFORCED
REQ'D.	REQUIRED
RM.	ROOM
R.O.	ROUGH OPENING
R.W.L.	RAIN WATER LEADER
S.C.	SOLID CORE
SCHED.	SCHEDULE
S.D.	STORM DRAIN
SDST	SELF DRIVING SELF TAPPING
SEC.	SECURITY
SHT.	SHEET
SHTHG.	SHEATHING
SIM.	SIMILAR
S.M.	SHEET METAL
SPEC.	SPECIFICATION
SQ.	SQUARE
S.S.	SANITARY SEWER
S.ST.	STAINLESS STEEL
STL.	STEEL
ST.	STORAGE
STRUCT.	STRUCTURAL
SUSP.	SUSPENDED
SUSP. CLG.	SUSPENDED CEILING
SYS.	SYSTEM
T	TREAD
T&G	TONGUE & GROOVE
T.B.R.	TO BE REMOVED
THK.	THICK(NESS)
T.O.	TOP OF
T.O.C.	TOP OF CURB
T.O.P.	TOP OF PARAPET
T.O.P.	TOP OF PLATE
TOPO.	TOPOGRAPHY
T.O.S.	TOP OF STEEL
T.O.W.	TOP OF WALL
TYP.	TYPICAL
U.N.O.	UNLESS NOTED OTHERWISE
VERT.	VERTICAL
V.I.F.	VERIFY IN FIELD
W/	WITH
W/O	WITHOUT
W.C.	WATER CLOSET
WD.	WOOD
W.I.C.	WALK IN CLOSET
W.H.	WATER HEATER
WT.	WEIGHT
WTR.	WATER

GENERAL NOTES

1. IT IS THE CONTRACTOR'S RESPONSIBILITY TO REVIEW ALL NOTES AND DETAILS IN THIS SET OF DRAWINGS AND INCORPORATE IN THE CONSTRUCTION OF STRUCTURE(S).
2. CONSTRUCTION MUST CONFORM TO THE DESIGN APPROVED BY THE PLANNING DEPARTMENT IN THE CONDITIONS OF APPROVAL.
3. ALL CONSTRUCTION AND MATERIALS SHALL BE IN ACCORDANCE WITH CURRENT CALIFORNIA CODE OF REGULATIONS AND ALL LOCAL CODES AND AUTHORITIES.
4. THE CONTRACTOR SHALL BE RESPONSIBLE FOR THE ACCURATE PLACEMENT OF THE BUILDINGS ON THE SITE.
5. THE CONTRACTOR SHALL VERIFY ALL DIMENSIONS AND SITE CONDITIONS BEFORE STARTING WORK.
6. SHOULD ANY CONDITION ARISE WHERE THE INTENT OF THE DRAWINGS IS IN DOUBT, OR WHERE THERE IS A DISCREPENCY BETWEEN THE CONSTRUCTION DOCUMENTS AND THE FIELD CONDITIONS, THE ARCHITECT SHALL BE NOTIFIED AS SOON AS POSSIBLE FOR INSTRUCTIONS ON HOW TO PROCEED.
7. SEE CIVIL ENGINEERING DRAWINGS FOR ADDITIONAL SITE WORK, AND IMPROVEMENTS WITHIN THE RIGHT OF WAY.
8. PROVIDE AND INSTALL DI-ELECTRIC FITTINGS ON PIPING
9. WHERE DISSIMILAR MATERIALS ARE JOINED, ALL FLASHINGS ARE TO BE INSTALLED PER SMACNA STANDARDS.
10. PREPARE THE SITE IN ACCORDANCE WITH THE SOILS REPORT RECOMMENDATIONS OF THE GEOTECHNICAL ENGINEER.
11. PRIOR TO EXCAVATION, THE CONTRACTOR SHALL VERIFY THE TYPE, EXTENT, AND LOCATION OF ALL UTILITY LINES ALREADY INSTALLED.
12. IF ARTIFACTS OR SKELETAL REMAINS ARE ENCOUNTERED DURING CONSTRUCTION, ALL WORK IS TO BE STOPPED AND THE LOCAL COMMUNITY DEVELOPMENT DEPARTMENT SHALL BE NOTIFIED IN ORDER THAT THE FIND MAY BE ASSESSED.
13. NO PORTION OF THE WORK REQUIRING A SHOP DRAWING OR SAMPLE SUBMITTAL SHALL COMMENCE UNTIL THE SUBMITTAL HAS BEEN REVIEWED BY THE ARCHITECT.
14. NOTED DIMENSIONS SHALL TAKE PRECEDENCE OVER SCALED DIMENSIONS.
15. SUBSTITUTIONS SHALL NOT BE ALLOWED WITHOUT PRIOR APPROVAL FROM BOTH THE ARCHITECT AND THE OWNER, CONSIDERATION WILL BE GIVEN TO LIFE SAFETY, FIRE RATING, ACOUSTICS, WATERPROOFING, STRUCTURAL INTEGRITY, ACCESSIBLITY, AND AESTHETICS WHEN ASSESSING PROPOSED SUBSTITUTIONS.
16. DIMENSIONS ARE TO FACE OF STUD OR CENTERLINE UNLESS OTHERWISE NOTED.
17. ALL EXTERIOR METAL SHALL BE PRIMED AND PAINTED, U.N.O.
18. THE CONTRACTOR SHALL PROTECT FROM DAMAGE DUE TO CONSTRUCTION INCLUDING ADJACENT PROPERTIES, ON- AND OFF-SITE WORK.

VICINITY MAP

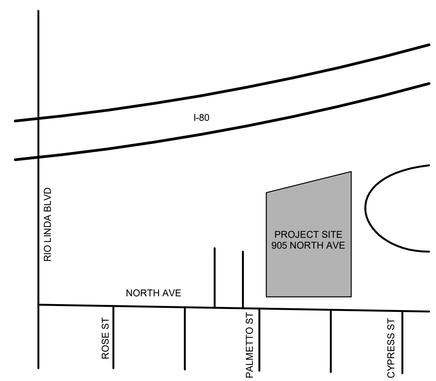

DRAFTING SYMBOLS

1 A101 SIM	SECTION BUBBLE	TEXT	KEYNOTE
		1	GENERAL NOTE
		22	WINDOW TYPE
1 A101 SIM	DETAIL BUBBLE	101	DOOR TYPE
		1	REVISIONS
OFFICE	ROOM NAME		DATUM POINT
			PROPERTY LINE

APPLICABLE CODES

ALL WORK SHALL COMPLY WITH THE LOCAL ORDINANCES AND THE BUILDING CODES AS ADOPTED BY THE CITY OF SACRAMENTO.

2022 CRC (CALIFORNIA RESIDENTIAL CODE)
2022 CBC (CALIFORNIA BUILDING CODE)
2022 CPC (CALIFORNIA PLUMBING CODE)
2022 CMC (CALIFORNIA MECHANICAL CODE)
2022 CEC (CALIFORNIA ELECTRICAL CODE)
2022 CAL GREEN (CALIFORNIA GREEN BUILDING STANDARDS CODE)
2022 CALIFORNIA ENERGY CODE

PROJECT DESCRIPTION

SCOPE OF WORK: SUBDIVISION OF (3) EXISTING PARCELS INTO (8) SINGLE FAMILY LOTS. ONSITE CONSTRUCTION CONSISTING OF THE FOLLOWING:

- DEMOLITION OF EXISTING CONCRETE DRIVEWAYS
- REMOVAL OF SEVERAL SMALL TREES
- GRADING AND DRAINAGE
- CONSTRUCTION OF ONSITE DETENTION BASIN
- CONSTRUCTION OF CONCRETE DRIVEWAY AT SITE ENTRANCE AND PRIVATE ROADWAY, INCLUDING FIRE DEPARTMENT TURNAROUND
- CONSTRUCTION OF DRIVEWAYS AT EXISTING HOUSE TO REMAIN, AS WELL AS NEW HALF-PLEXES AND NEW SINGLE FAMILY UNIT
- ONSITE PEDESTRIAN SIDEWALKS AND PATIOS
- CONSTRUCTION OF ONSITE UNDERGROUND UTILITIES, INCLUDING BUT NOT LIMITED TO DOMESTIC WATER, SANITARY SEWER AND STORM SEWER
- SITE LIGHTING FOR PRIVATE ROADWAY AND PEDESTRIAN SIDEWALK
- ONSITE LANDSCAPE AND IRRIGATION
- EROSION AND SEDIMENT CONTROL DURING CONSTRUCTION ACTIVITIES

CONSTRUCTION OF (6) STRUCTURALLY INDEPENDENT HALF-PLEX UNITS AND (1) SINGLE FAMILY UNIT UNDER SEPARATE APPLICATION (RES-2227146).

OFFSITE IMPROVEMENTS, JOINT TRENCH WORK UNDER SEPARATE APPLICATION. 7

CONSTRUCTION TYPE: TYPE VB

OCCUPANCY TYPE: R-3/U [SINGLE FAMILY RESIDENTIAL (R-3) / GARAGE (U)]

ZONING: R-2A

PROJECT DIRECTORY

OWNER:

CONTACT: DARREN BROWN
4010 FOOTHILLS BLVD, STE. 103
ROSEVILLE, CA 95747
PH: 916.300.7962
EMAIL: darrenbrown@comcast.net

CIVIL ENGINEER:

CWE
CONTACT: BOB EYNCK
2260 DOUGLAS BLVD, STE. 160
ROSEVILLE, CA 95661
PH: 916.772.7800
EMAIL: reynck@cwecorp.com

ARCHITECT:

ELLIS ARCHITECTS, INC.
CONTACT: SARAH ELLIS
4132 C STREET
SACRAMENTO, CA 95819
PH 916-440-6765
EMAIL sarah@ellis-architects.com

SITE ELECTRICAL:

OPTIMIZED ENERGY
CONTACT: ALEXANDER NELKEN
PH: 916.626.5518
EMAIL: ajn@oefcinc.com

SHEET INDEX

ARCHITECTURAL
G0.21. GENERAL INFORMATION

ARCHITECTURAL SITE (FOR REFERENCE ONLY)
A1.11 (FRO) OVERALL SITE PLAN (FOR REFERENCE ONLY)

CIVIL OFFSITE (FOR REF. ONLY)
C1. TITLE SHEET
C2.1. GENERAL NOTES 1
C2.2. GENERAL NOTES 2
C3. EXISTING CONDITIONS
C4. OFFSITE DEMOLITION PLAN
C5. NORTH AVENUE PLAN AND PROFILE
C6. OFFSITE UTILITY PLAN
C7. OFFSITE GRADING, EROSION AND SEDIMENT CONTROL PLAN
C8. OFFSITE EROSION AND SEDIMENT CONTROL NOTES AND DETAILS
C9. CONSTRUCTION DETAILS
C10. SIGNING AND STRIPING PLAN 5

CIVIL ONSITE
C1 TITLE SHEET
C2.1 GENERAL NOTES
C2.2 GENERAL NOTES 2
C3 EXISTING CONDITIONS
C4 DEMOLITION PLAN
C5 HORIZONTAL CONTROL PLAN
C6.1 GRADING, DRAINAGE AND PAVING PLAN
C6.2 GRADING AND DRAINAGE DETAILS
C7 UTILITY PLAN
C8 EROSION AND SEDIMENT CONTROL PLAN
C9 EROSION AND SEDIMENT CONTROL NOTES AND DETAILS
C10.1 CONSTRUCTION DETAILS 1
C10.2 CONSTRUCTION DETAILS 2
C10.3 CONSTRUCTION DETAILS 3

LANDSCAPE
L1 LANDSCAPE NOTES AND DETAILS
L2 IRRIGATION PLAN
L3 PLANTING NOTES AND DETAILS
L4 PLANTING PLAN 7

OFFSITE SITE ELECTRICAL (FOR REF. ONLY)
CE0 ELECTRICAL POWER OFFSITE PLAN

ONSITE SITE ELECTRICAL
E0 PHOTOMETRIC SITE PLAN
E1 ELECTRICAL POWER SITE PLAN
EN0 SITE LIGHTING ENERGY REPORT

ELLIS ARCHITECTS
4132 C Street
Sacramento, CA 95819
916.440.6765
ellis-architects.com

LICENSED ARCHITECT
SARAH NERSES IAN ELLIS
C-29460
REN. 07-31-25
STATE OF CALIFORNIA

© 2023 ELLIS ARCHITECTS, INC.

NORTH AVENUE HALF-PLEXES
DARREN BROWN
905 NORTH AVENUE, SACRAMENTO, CALIFORNIA
APN # 237-0020-092

PLAN CHECK SET

DATE:
06/02/2022

REVISIONS:

5	ONSITE CYC4	09.20.2023
6	ONSITE CYC5	11.13.2023
7	ONSITE CYC6	12.19.2023

SHEET TITLE
GENERAL INFORMATION

SHEET NO.
G0.21.

IF THIS SHEET IS NOT 24 x 36, IT IS A REDUCED PRINT - SCALE ACCORDINGLY
C:\Users\vince\Documents\18032_North Ave_Site_R22_CENTRAL_vince@ellis-architects.com.rvt
12/19/2023 10:17:03 AM

IF THIS SHEET IS NOT 24 x 36, IT IS A REDUCED PRINT - SCALE ACCORDINGLY

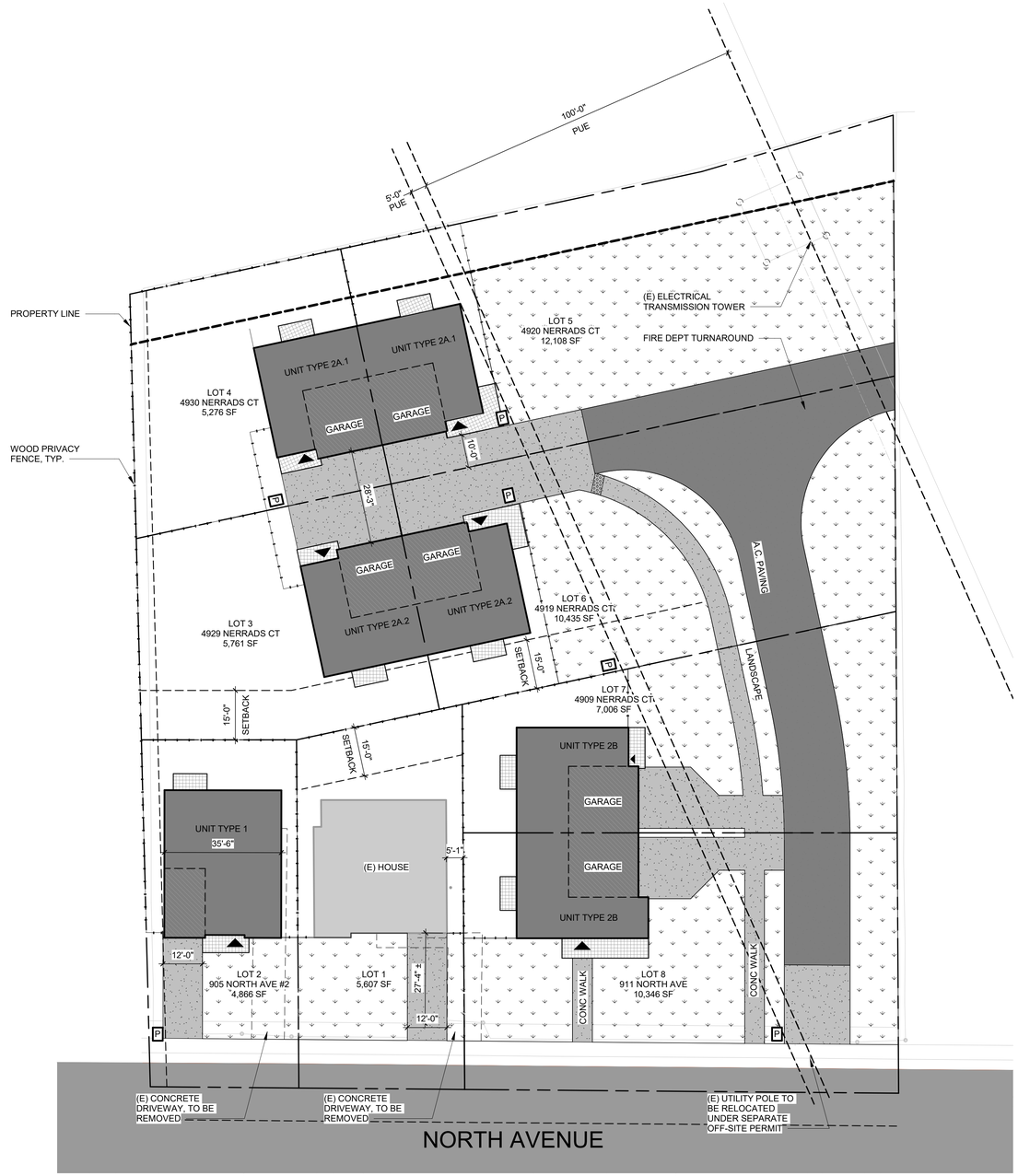

1 SITE PLAN
1" = 20'-0"

N

PROJECT DATA

ADDRESS:	905 NORTH AVE
APN #:	237-0020-092
FPM#:	FPM22-0037
ZONING:	R-2A MULTI-FAMILY RESIDENTIAL
LAND USE & URBAN FORM DESIGNATION:	TRADTL NEIGHBORHOOD MEDIUM DENSITY
AREA OF PARCEL:	1.41 ACRES (61,420 SF)
MAX DWELLING UNITS / ACRE	17
MAXIMUM # OF DWELLING UNITS:	23
PROPOSED USE:	SINGLE FAMILY
# OF DWELLING UNITS PROPOSED:	7
MAX FLOOR AREA RATIO:	N/A
ALLOWABLE FLOOR AREA:	N/A
MAX BUILDING HEIGHT:	35'-0"
PROPOSED HEIGHT:	24'-3 1/2"
MAX NUMBER OF STORIES:	3
PROPOSED NUMBER OF STORIES:	2
PARKING DISTRICT:	TRADITIONAL
REQUIRED # OF ONSITE PARKING SPACES:	7
PROVIDED # OF ONSITE PARKING SPACES:	13
ONSTREET PARKING SPACES:	0

SITE PLAN GEN. NOTES

1. PROJECT HAS RECEIVED DESIGN REVIEW APPROVAL FROM THE CITY OF SACRAMENTO. ROD#P19-036, DATED 07/09/2020.
2. GRADE SITE AS INDICATED ON CIVIL PLANS. GRADE TO AVOID ON-SITE WATER RETENTION AND DRAINAGE ONTO ADJACENT SITE. NOTIFY ARCHITECT OF ANY DISCREPANCIES.
3. GROUND IMMEDIATELY ADJACENT TO THE FOUNDATION SHALL BE SLOPED AWAY FROM THE BUILDING AT A SLOPE OF NOT LESS THAN 5% FOR A MINIMUM DISTANCE OF 10'-0" MEASURED PERPENDICULAR TO THE FACE OF THE WALL. IF OBSTACLE OR LOT LINE PROHIBIT 10'-0" HORIZONTAL DISTANCE, A 5% SLOPE SHALL BE PROVIDED TO AN APPROVED ALTERNATIVE METHOD OF DIVERTING WATER AWAY FROM THE FOUNDATION. IMPERVIOUS SURFACES WITHIN 10'-0" OF THE BUILDING FOUNDATION SHALL BE SLOPED A MINIMUM OF 2% AWAY FROM THE BUILDING. (CBC 1804.4, CRC R401.3)
4. ANY SURVEY MONUMENT WITHIN THE AREAS OF CONSTRUCTION SHALL BE PRESERVED OR RESET BY A REGISTERED CIVIL ENGINEER OR LICENSED LAND SURVEYOR.
5. VERIFY, LOCATE, AND INDICATE ALL PROPERTY CORNERS, SETBACKS. EASEMENTS, AND BUILDING LOCATION CORNERS PRIOR TO FOUNDATION INSPECTION.
6. ALL FOOTINGS SHALL REST ON FIRM NATURAL SOIL OR COMPACTED FILL.
7. VERIFY MINIMUM REQUIRED 'WATER' PIPE SIZE OF 1.5" AND MINIMUM REQUIRED 'WASTE' PIPE SIZE OF 4". NOTIFY CITY INSPECTOR OF ANY DISCREPANCY.
8. MAINTAIN SAFETY CLEARANCE AT (E) POWER LINES PER CAL OSHA AND CALIFORNIA PUBLIC UTILITY COMMISSION GENERAL ORDER 95.
9. SEE CIVIL DRAWINGS FOR ADDITIONAL INFORMATION.
10. AT LOTS 3 & 6, THERE WILL BE NO REAR COVERED PORCH

SITE PLAN LEGEND

- LANDSCAPE AREA
- CONCRETE PORCH
- CONCRETE WALK / DRIVEWAY
- DETECTABLE WARNING, TRUNCATED DOMES
- 6' H. WOOD PRIVACY FENCE
- PRIMARY ENTRANCE LOCATION
- TRASH / RECYCLING CAN
- P — PROPOSED PULL BOX LOCATION, REFER TO JOINT TRENCH DRAWINGS UNDER SEPARATE APPLICATION

ELLIS ARCHITECTS
4132 C Street
Sacramento, CA 95819
916.440.6765
ellis-architects.com

LICENSED ARCHITECT
SARAH NERSES IAN ELLIS
C-29460
REN. 07-31-23
STATE OF CALIFORNIA

© 2023 ELLIS ARCHITECTS, INC.

NORTH AVENUE HALF-PLEXES

DARREN BROWN

905 NORTH AVENUE, SACRAMENTO, CALIFORNIA

APN # 237-0020-092

PLAN CHECK SET

DATE:

06/02/2022

REVISIONS:

SHEET TITLE

OVERALL SITE PLAN

SHEET NO.

A1.11

FOR REFERENCE ONLY

C:\Users\mark\Documents\18032_North Ave_Site_R22_CENTRAL_mark9.rvt

4/12/2023 21:06:42

ON-SITE IMPROVEMENT PLANS FOR
NERRADSCALI SUBDIVISION
CITY OF SACRAMENTO, STATE OF CALIFORNIA, 95838
APN: 237-0200-092
BUILDING PERMIT NO. COM2307306

LEGEND

DESCRIPTION	EXISTING	PROPOSED
PROPERTY LINE		
ROW		
EASEMENT		
LOT LINE		
CENTERLINE		
SW, CURB & GUTTER		
DITCH / FLOWLINE		
EP		
STORM DRAIN	XX"SD	XX"SD
SANITARY SEWER	XX"SS	XX"SS
WATER LINE	XX"W	XX"W
SDMH	D	D
DRAINAGE INLET		
DIRECTION OF SURFACE FLOW		
OVERLAND RELEASE PATH		
SSMH	S	
SSCO		
FIRE HYDRANT		
WATER VALVE		
WATER METER	WM	WM
BACKFLOW PREVENTION ASSEMBLY		
REDUCED PRESSURE BACKFLOW PREVENTION ASSEMBLY	RP	RP
BLOW OFF ASSEMBLY		
PIPE CAP		
UTILITY POLE		
UTILITY POLE WITH LIGHT		
STREET LIGHT		
SITE LIGHT		
JUNCTION/PULL BOX	PB	PB
MONUMENT WELL		
BOLLARD		
SIGN		
FENCE	X X	X X
MAJOR CONTOUR	25	25
MINOR CONTOUR		
GRADE BREAK LINE		GB
TREE & DRIP		REMOVAL
CONTROL POINT		100 100.00 PK
FINISH FLOOR ELEVATION	FF: 123.00	FF: 123.00
SPOT ELEVATION (ASPHALT CONCRETE)	× 157.01 AC	13.34 AC
MATCH (E) GRADE ELEVATION		13.61 AC MATCH (E)
TRUNCATED DOMES		
BUILDING		

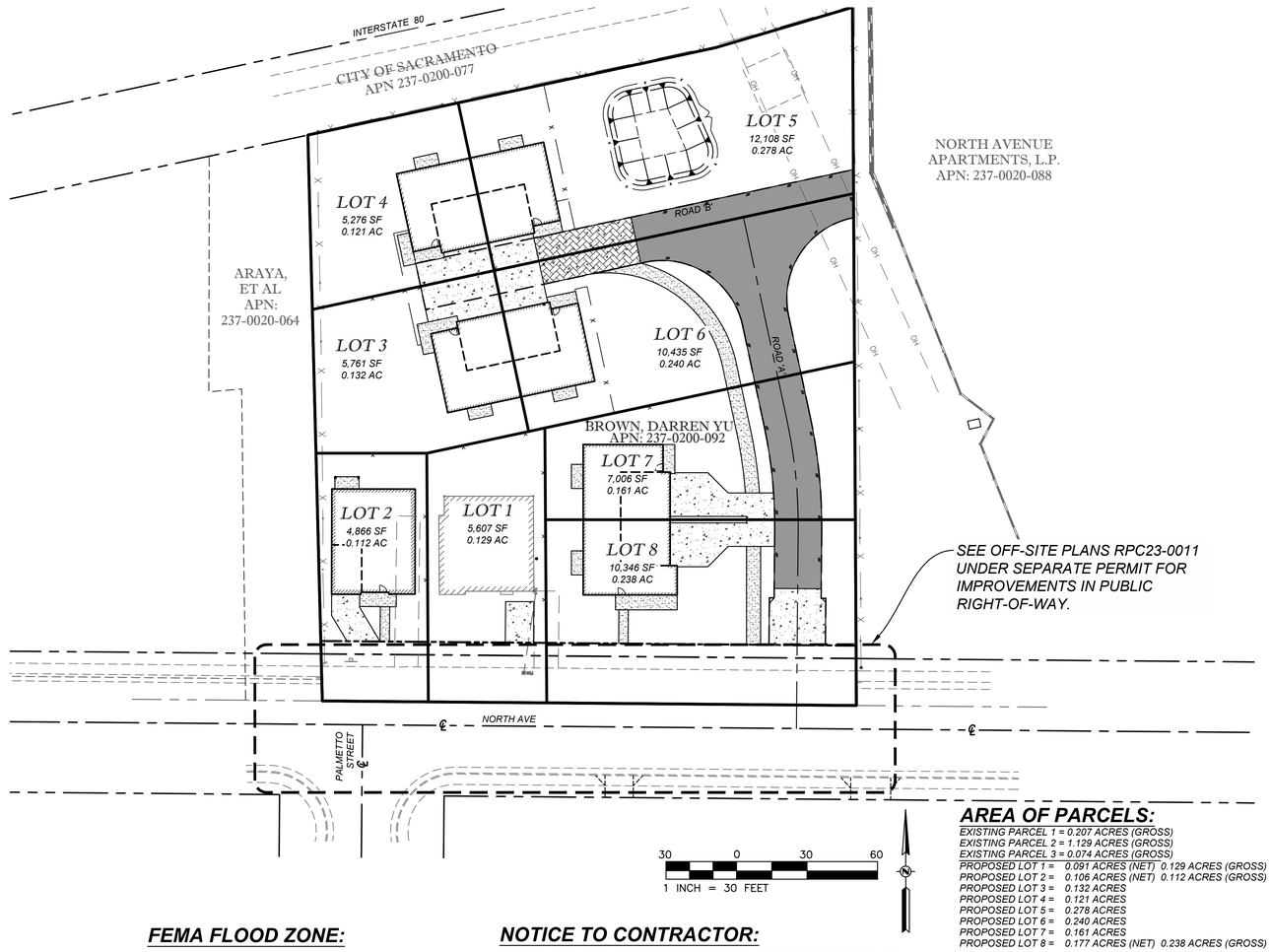

SEE OFF-SITE PLANS RPC23-0011 UNDER SEPARATE PERMIT FOR IMPROVEMENTS IN PUBLIC RIGHT-OF-WAY.

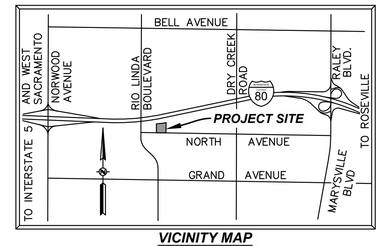

VICINITY MAP
NO SCALE

SHEET INDEX:

PAGE NO.	SHEET	NAME
1	C1	TITLE SHEET
2	C2.1	GENERAL NOTES 1
3	C2.2	GENERAL NOTES 2
4	C3	EXISTING CONDITIONS
5	C4	DEMOLITION PLAN
6	C5	HORIZONTAL CONTROL PLAN
7	C6.1	GRADING, DRAINAGE, AND PAVING PLAN
8	C6.2	GRADING AND DRAINAGE DETAILS
9	C7	UTILITY PLAN
10	C8	EROSION AND SEDIMENT CONTROL PLAN
11	C9	EROSION & SEDIMENT CONTROL NOTES & DETAILS
12	C10.1	CONSTRUCTION DETAILS 1
13	C10.2	CONSTRUCTION DETAILS 2
14	C10.3	CONSTRUCTION DETAILS 3

PROPERTY OWNER / DEVELOPER:

NERRADSCALI CORPORATION
3960 KINGSBARNS DRIVE
ROSEVILLE, CA 95747

CONTACT: DARREN BROWN
PH: (916) 300-7962
EMAIL: DARRENBBROWN@COMCAST.NET

TOPOGRAPHIC SURVEY:

MICHAEL DEQUINE AND ASSOCIATES, INC.
1431 NORTH MARKET BOULEVARD, SUITE 7
SACRAMENTO, CA 95834

CONTACT: MICHAEL DEQUINE, L.S.
PH: (916) 285-0519
EMAIL MDEQUINE@MDEQUINE.COM
LICENSE NUMBER: LS 5614

ASSESSOR'S PARCEL NO.:

APN: 237-0200-092

JURISDICTION:

CITY OF SACRAMENTO

USE:

EXISTING: RESIDENTIAL AND VACANT LAND
PROPOSED: MULTI-FAMILY DWELLING

ZONING:

R-2A MULTI-DWELLING UNIT ZONING

BENCHMARK:

BENCHMARK 278-A2C
A HILTI NAIL IN LIGHT BASE OF SE CORNER OF DRY CREEK ROAD AND NORTH AVENUE.
ELEV: 40.402' (NAVD88)

CONDITIONS OF APPROVAL:

PROJECT SHALL COMPLY WITH ALL CONDITIONS OF APPROVAL P19-036

GEOTECHNICAL REPORT:

BY: ALLERION CONSULTING GROUP
REPORT NO: 05-22016G DATED:03-23-2022

CODE INFORMATION:

1. APPLICABLE CODES:
   - 2022 CALIFORNIA BUILDING CODE (CBC)
   - 2022 CALIFORNIA MECHANICAL CODE (CMC)
   - 2022 CALIFORNIA PLUMBING CODE (CPC)
   - 2022 CALIFORNIA ELECTRICAL CODE (CEC)
   - 2022 CALIFORNIA ENERGY CODE (CEC T-24)
   - 2022 CALIFORNIA FIRE CODE (CFC)
   - 2022 CALIFORNIA GREEN BUILDING STANDARDS CODE (CGBSC)

ABBREVIATIONS:

AB	AGGREGATE BASE
AC	ASPHALT CONCRETE
ARV	AIR RELEASE VALVE
BC	BEGIN CURVE
BCR	BEGIN CURB RETURN
BOW	BACK-OF-WALK
BR	BOTTOM OF RAMP
CH	CHORD
C	CENTERLINE
CMP	CORRUGATED METAL PIPE
COTG	CLEAN-OUT TO GRADE
DI	DROP INLET
DIP	DUCTILE IRON PIPE
DS	DOWN SPOUT
DW	DOMESTIC WATER
(E)	EXISTING
EC	END CURVE
ECR	END CURB RETURN
EP	EDGE OF PAVEMENT
FDC	FIRE DEPARTMENT CONNECTION
FF	FINISH FLOOR
FG	FINISHED GROUND
FH	FIRE HYDRANT
FL	FLOW LINE
FG	FINISH PAVEMENT
FS	FIRE SERVICE
GB	GRADE BREAK
GR	GRATE
GV	GATE VALVE
GVW	GROSS VEHICLE WEIGHT
HC	HANDICAP
HP	HIGH POINT
IRR	IRRIGATION
INV	INVERT
LT	LEFT TURN
OCEW	ON CENTER EACH WAY
OMP	OPEN METAL PIPE
(P)	PROPOSED
PCC	PORTLAND CEMENT CONCRETE
PG	PROFILE GRADE
PIV	POST INDICATOR VALVE
POC	POINT OF CONNECTION
PL	PROPERTY LINE
PUE	PUBLIC UTILITY EASEMENT
RCP	REINFORCED CONCRETE PIPE
ROW	RIGHT-OF-WAY
RT	RIGHT TURN
RPPA	REDUCED PRESSURE PRINCIPLE ASSEMBLY
RSP	ROCK SLOPE PROTECTION
SASD	SACRAMENTO AREA SEWER DISTRICT
SDMH	STORM DRAIN MANHOLE
SD	STORM DRAIN
SS	SANITARY SEWER
SSCO	SANITARY SEWER CLEAN OUT
SSMH	SANITARY SEWER MANHOLE
SWCT	SAWCUT
SW	SIDEWALK
STA	STATION
TC	TOP OF CURB
TP	TOP OF PAVEMENT
TS	TOP OF SIDEWALK
TR	TOP OF RAMP
TG	TOP OF GRATE
W	WATER
WV	WATER VALVE
WM	WATER METER
WWF	WELDED WIRE FABRIC

FEMA FLOOD ZONE:

SUBJECT PROPERTY IS LOCATED WITHIN ZONE "X", WITH A REDUCED RISK OF FLOODING DUE TO LEVEE. AS DETERMINED BY THE NATIONAL FLOOD INSURANCE PROGRAM, FLOOD INSURANCE RATE MAP COMMUNITY PANEL NO.: 06067C0064 DATED: 06/16/2015

NOTICE TO CONTRACTOR - ORDER OF WORK:

PRIOR TO THE START OF ANY CIVIL WORK, IT SHALL BE THE RESPONSIBILITY OF THE CONTRACTOR TO VERIFY THE HORIZONTAL AND VERTICAL LOCATIONS OF ALL EXISTING UTILITIES BY POTHOLING AT ALL POINTS OF POTENTIAL CONFLICT WITH PROPOSED UTILITIES OR PROPOSED POINTS OF CONNECTION WITH EXISTING UTILITIES. IF THE ACTUAL LOCATIONS OF THE EXISTING UTILITIES FOUND IN THE FIELD ARE DIFFERENT FROM WHAT IS SHOWN ON THESE PLANS, THE CONTRACTOR SHALL CONTACT RFE ENGINEERING IMMEDIATELY AND PROVIDE THE ACTUAL LOCATION INFORMATION. RFE ENGINEERING WILL VERIFY IF THERE ARE ANY CONFLICTS WITH THE IMPROVEMENTS AND WILL PROVIDE MODIFICATIONS TO THE DESIGN TO MITIGATE THE CONFLICTS IF ANY CONFLICTS EXIST. IN ADDITION, CONTRACTOR SHALL VERIFY ALL CONFORM ELEVATIONS FOR ANY DEVIATIONS FROM PLANS PRIOR TO CONSTRUCTION. CONTRACTOR SHALL CONTACT RFE ENGINEERING IMMEDIATELY AND PROVIDE ALL DEVIATION GRADE INFORMATION.

NOTE:
ALL CONSTRUCTION WITHIN PUBLIC RIGHT OF WAY AND WITHIN ANY P.U.E. SHALL REQUIRE AN ENCROACHMENT PERMIT FROM THE CITY OF SACRAMENTO.

NEW DRIVEWAYS WILL REQUIRE A SEPARATE DRIVEWAY PERMIT FROM THE CITY OF SACRAMENTO DEPARTMENT OF PUBLIC WORKS.

NOTICE TO CONTRACTOR:

THIS PROJECT HAS AN APPROVED STATE GENERAL CONSTRUCTION PERMIT AND STORMWATER POLLUTION PREVENTION PLAN (SWPPP). WDID # 5S34C400468
CONTRACTOR IS RESPONSIBLE TO HIRE A STATE CERTIFIED QSP (QUALIFIED SWPPP PRACTITIONER) TO OVERSEE IMPLEMENTATION OF THE SWPPP PRIOR TO START OF CONSTRUCTION. ALL REQUIRED INSPECTIONS, TRAINING AND REQUIRED TESTING AND REPORTING SHALL BE OVERSEEN BY THE QSP.

THE FINAL APPROVED SWPPP SHALL BE KEPT ON THE CONSTRUCTION SITE DURING CONSTRUCTION AND MAINTAINED BY THE QSP.
CONTRACTOR SHALL SEND THE FINAL SWPPP WITH ALL INSPECTION, TESTING, AMENDMENTS, REPORTS AND OTHER DOCUMENTATION TO THE OWNER ONCE CONSTRUCTION HAS BEEN COMPLETED AND THE NOTICE OF TERMINATION SUBMITTED.

CONTRACTOR SHALL HAVE A PRECONSTRUCTION MEETING AND INCLUDE THE QSP AND CIVIL ENGINEER IN THE MEETING, EITHER ON-SITE OR VIA TELEPHONE CONFERENCE.

TOTAL DISTURBED AREA: 1.291 ACRES (ON-SITE)

TOTAL INCREASE IN IMPERVIOUS AREA: 0.438± ACRES

RAW EARTHWORK SUMMARY

CUT: 1,100 CY
FILL: 410 CY
NET: 690 CY EXPORT
NOTE:
EARTHWORK QUANTITIES ARE ESTIMATED TO SUBGRADE AND DO NOT TAKE INTO ACCOUNT SHRINKAGE, EXCESS MATERIALS FROM TRENCHING AND MISC. UNKNOWN STRUCTURAL SECTIONS. CONTRACTOR SHOULD VERIFY EARTHWORK QUANTITIES.

AREA OF PARCELS:

EXISTING PARCEL 1 = 0.207 ACRES (GROSS)
EXISTING PARCEL 2 = 1.129 ACRES (GROSS)
EXISTING PARCEL 3 = 0.074 ACRES (GROSS)
PROPOSED LOT 1 = 0.091 ACRES (NET) 0.129 ACRES (GROSS)
PROPOSED LOT 2 = 0.106 ACRES (NET) 0.112 ACRES (GROSS)
PROPOSED LOT 3 = 0.132 ACRES
PROPOSED LOT 4 = 0.121 ACRES
PROPOSED LOT 5 = 0.278 ACRES
PROPOSED LOT 6 = 0.240 ACRES
PROPOSED LOT 7 = 0.161 ACRES
PROPOSED LOT 8 = 0.177 ACRES (NET) 0.238 ACRES (GROSS)

PROJECT DESCRIPTION:

THE EXISTING 3 LOTS WITH ONE-SINGLE FAMILY RESIDENCE IS BEING DIVIDED INTO 8 LOTS WITH A SINGLE FAMILY HOME ON EACH PARCEL.THE EXISTING SINGLE FAMILY HOME IS TO REMAIN. UTILITIES AND ACCESS ARE PROVIDED THROUGH A PRIVATE ACCESS DRIVEWAY AND P.U.E. STORMWATER IS CAPTURED ON-SITE VIA ATTENUATED DETENTION BASIN.

UNDERGROUND UTILITY NOTE:

THE UNDERGROUND UTILITIES SHOWN HAVE BEEN LOCATED FROM FIELD SURVEY INFORMATION AND EXISTING DRAWINGS. THE SURVEYOR MAKES NO GUARANTEE THAT THE UNDERGROUND UTILITIES SHOWN COMPRISE ALL SUCH UTILITIES IN THE AREA, EITHER IN SERVICE OR ABANDONED. THE SURVEYOR FURTHER DOES NOT GUARANTEE THAT THE UNDERGROUND UTILITIES SHOWN ARE IN THE EXACT LOCATION INDICATED ALTHOUGH HE DOES CERTIFY THAT THEY ARE LOCATED AS ACCURATELY AS POSSIBLE FROM INFORMATION AVAILABLE. THE SURVEYOR HAS NOT PHYSICALLY LOCATED THE UNDERGROUND UTILITIES.

UTILITY REPRESENTATIVES

UTILITY	COMPANY	CONTACT	PHONE
GAS	P.G.& E.	LARRY SCHLAHT	916-561-6711
ELECTRIC	S.M.U.D.	GENE HOPPES	916-732-5789
TELEPHONE	AT&T	PAUL CLARK	916-453-7016
WATER	CITY OF SACRAMENTO	LORENZO HERNANDEZ	916-808-4939
SEWER	CITY OF SACRAMENTO	LORENZO HERNANDEZ	916-808-4939
DRAINAGE	CITY OF SACRAMENTO	LORENZO HERNANDEZ	916-808-4939
U.S.A.	- -	- -	800-227-2600
FIRE	CITY OF SACRAMENTO	MARTY HILL	916-808-1625
CATV	COMCAST	MARK DUBY	916-648-8310

811
Know what's **below.**
Call before you dig.
or (800) 227-2600

UNAUTHORIZED CHANGES AND USES:

THE ENGINEER PREPARING THESE PLANS WILL NOT BE RESPONSIBLE FOR UNAUTHORIZED CHANGES TO OR USES OF THESE PLANS. ALL CHANGES TO THESE PLANS MUST BE APPROVED BY THE PREPARER OF THESE PLANS.

SUBMITTED BY:

ROBERT F. EYNCK, P.E. C040666 DATE

NO.	REVISION	DATE	BY	APPRV'D

	BY	CHECK
DESIGN	MJW	RFE
DRAWN	DCJ	RFE
QUANT.		

ORIGINAL SCALE IS IN INCHES 0 1 2

REGISTERED PROFESSIONAL ENGINEER ROBERT F. EYNCK No. C040666 Exp. 3-31-25 CIVIL STATE OF CALIFORNIA
11/13/2023

2260 Douglas Blvd, Suite 160, Roseville, CA 95661
Ph: 916-772-7800 | www.cwecorp.com

PROPERTY OWNER / DEVELOPER
NERRADSCALI CORPORATION
3960 KINGSBARNS DRIVE
ROSEVILLE, CA 95747
CONTACT: DARREN BROWN
PH: (916) 300-7962
EMAIL: DARRENBBROWN@COMCAST.NET

ON-SITE IMPROVEMENT PLANS FOR
NERRADSCALI SUBDIVISION
SACRAMENTO, CA 95838
APN: 237-0200-092

TITLE SHEET

Sheet
C1

11/13/2023

W:\2021 Projects\21-188 905 North Ave Sac\Working CAD\ONSITE C1 TITLE.dwg Nov 13, 2023-09:24 am

PROJECT GENERAL NOTES:

1. THE EXISTING BOUNDARY AND TOPOGRAPHIC INFORMATION SHOWN ON THESE PLANS IS FROM A TOPOGRAPHIC SURVEY PLAN AND SUPPLEMENTAL SURVEY PREPARED BY RFE ENGINEERING AND REFERENCED ON SHEET C1. CONTRACTOR SHALL VERIFY EXISTING CONDITIONS, ESPECIALLY POINTS OF CONNECTION TO EXISTING FACILITIES FOR ALL IMPROVEMENTS PRIOR TO CONSTRUCTION OF APPLICABLE FACILITIES. CONTRACTOR SHALL NOTIFY RFE ENGINEERING, INC. IMMEDIATELY OF ANY DISCREPANCIES OR CONFLICTS DISCOVERED.

2. THE CONTRACTOR AGREES THAT, IN ACCORDANCE WITH GENERALLY ACCEPTED CONSTRUCTION PRACTICES, THE CONTRACTOR WILL BE REQUIRED TO ASSUME SOLE AND COMPLETE RESPONSIBILITY FOR JOB SITE CONDITIONS DURING THE COURSE OF CONSTRUCTION OF THE PROJECT, INCLUDING SAFETY OF ALL PERSONS AND PROPERTY. THIS REQUIREMENT SHALL BE MADE TO APPLY CONTINUOUSLY AND NOT BE LIMITED TO NORMAL WORKING HOURS. THE CONTRACTOR FURTHER AGREES TO DEFEND, INDEMNIFY AND HOLD OWNER AND ENGINEER HARMLESS FROM ANY AND ALL LIABILITY, REAL OR ALLEGED, IN CONNECTION WITH THE PERFORMANCE OF WORK ON THIS PROJECT, EXEMPTING LIABILITY ARISING FROM THE SOLE NEGLIGENCE OF ENGINEER.

3. EXCAVATIONS SHALL BE ADEQUATELY SHORED, BRACED AND SHEETED SO THAT THE EARTH WILL NOT SLIDE OR SETTLE AND SO THAT ALL EXISTING IMPROVEMENTS OF ANY KIND WILL BE FULLY PROTECTED FROM DAMAGE. ANY DAMAGE RESULTING FROM A LACK OF ADEQUATE SHORING, BRACING AND SHEETING, SHALL BE THE RESPONSIBILITY OF THE CONTRACTOR AND HE SHALL AFFECT NECESSARY REPAIRS OR RECONSTRUCTION AT HIS OWN EXPENSE. WHERE THE EXCAVATION FOR A CONDUIT TRENCH, AND/OR STRUCTURE IS FIVE FEET OR MORE IN DEPTH, THE CONTRACTOR SHALL PROVIDE ADEQUATE SHEETING, SHORING AND BRACING OR EQUIVALENT METHOD, FOR THE PROTECTION OF LIFE, OR LIMB, WHICH SHALL CONFORM TO THE APPLICABLE CONSTRUCTION SAFETY ORDERS OF THE DIVISION OF INDUSTRIAL SAFETY OF THE STATE OF CALIFORNIA. THE CONTRACTOR SHALL ALWAYS COMPLY WITH OSHA REQUIREMENTS.

4. OWNER WILL OBTAIN THE GENERAL BUILDING PERMIT. IT IS THE RESPONSIBILITY OF THE CONTRACTOR TO OBTAIN ANY ADDITIONAL PERMITS NECESSARY TO PERFORM THE WORK SHOWN ON THESE PLANS FROM THE APPROPRIATE AGENCIES.

5. THE CONTRACTOR SHALL TAKE EFFECTIVE ACTION TO PREVENT THE FORMATION OF AN AIRBORNE DUST NUISANCE AND SHALL BE RESPONSIBLE FOR ANY DAMAGE RESULTING FROM HIS FAILURE TO DO SO.

6. THE CONTRACTOR SHALL PROVIDE FOR INGRESS AND EGRESS FOR PRIVATE PROPERTY ADJACENT TO WORK THROUGHOUT THE PERIOD OF CONSTRUCTION. TRAFFIC MOVEMENT SHALL BE MAINTAINED AT ALL TIMES. IF TRAFFIC CONTROL PROCEDURES ARE DEEMED NECESSARY, THE CONTRACTOR SHALL CONFORM TO THE "WATCH HANDBOOK" AND CALTRANS TRAFFIC MANUAL. CITY/COUNTY ENGINEERS APPROVAL IS REQUIRED PRIOR TO ANY DETOURING, DISRUPTION, OR INTERRUPTION OF THE NORMAL TRAFFIC FLOW.

7. THE CONTRACTOR SHALL BE SOLELY AND COMPLETELY RESPONSIBLE FOR FURNISHING, INSTALLING, AND MAINTAINING ALL WARNING SIGNS AND DEVICES NECESSARY TO SAFEGUARD THE GENERAL PUBLIC AND THE WORK, AND PROVIDE FOR THE PROPER AND SAFE ROUTING OF ALL VEHICULAR AND PEDESTRIAN TRAFFIC DURING THE PERFORMANCE OF THE WORK. THE REQUIREMENT SHALL APPLY CONTINUOUSLY AND NOT BE LIMITED TO THE NORMAL WORKING HOURS.

8. THE CONTRACTOR SHALL POST EMERGENCY TELEPHONE NUMBERS FOR POLICE, FIRE, AMBULANCE, AND THOSE AGENCIES RESPONSIBLE FOR MAINTENANCE OF UTILITIES IN THE VICINITY OF THE JOBSITE.

9. ANY EXTRA CONSTRUCTION STAKING NECESSITATED SOLELY BY THE CONTRACTOR'S NEGLIGENCE WILL BE CHARGED TO THE CONTRACTOR ON A TIME AND MATERIAL BASIS, AND PAID FOR BY THE CONTRACTOR.

10. STATIONING HEREON IS ALONG STREET CENTERLINE UNLESS OTHERWISE SHOWN OR INDICATED.

11. ALL RETURN RADII AND CURB DATA ARE TO BOTTOM FACE OF CURB.

12. ALL QUANTITIES AND PAY ITEMS ARE AND WILL BE BASED ON HORIZONTAL MEASUREMENTS.

13. LENGTHS OF SANITARY SEWERS AND STORM DRAINS ARE HORIZONTAL DISTANCES FROM CENTER TO CENTER OF STRUCTURES, ROUNDED OFF TO THE NEAREST FOOT.

14. EXISTING UNDERGROUND UTILITIES AND IMPROVEMENTS ARE SHOWN IN THEIR APPROXIMATE LOCATIONS BASED ON FACILITIES IDENTIFIED BY THE TOPOGRAPHIC SURVEY AND UPON RECORD INFORMATION AVAILABLE TO THE ENGINEER AT THE TIME OF DESIGN AND NO GUARANTEE IS MADE AS TO THE ACCURACY OR COMPLETENESS OF THE INFORMATION SHOWN. THE CONTRACTOR SHALL NOTIFY UTILITY COMPANIES AT LEAST 2 WORKING DAYS IN ADVANCE OF CONSTRUCTION TO FIELD LOCATE UTILITIES. **CALL UNDERGROUND SERVICE ALERT (U.S.A.), AT 800-227-2600.** IT SHALL BE THE RESPONSIBILITY OF THE CONTRACTOR TO DETERMINE THE EXISTENCE AND LOCATION OF THOSE UTILITIES SHOWN ON THESE PLANS OR INDICATED IN THE FIELD BY LOCATING SERVICES. ANY ADDITIONAL COSTS INCURRED AS A RESULT OF CONTRACTOR'S FAILURE TO VERIFY LOCATIONS OF EXISTING UTILITIES PRIOR TO BEGINNING OF CONSTRUCTION IN THEIR VICINITY SHALL BE BORNE BY THE CONTRACTOR AND ASSUMED INCLUDED AND MERGED IN THE CONTRACT UNIT PRICE.

15. ALL EXISTING UTILITIES AND IMPROVEMENTS THAT BECOME DAMAGED DURING CONSTRUCTION SHALL BE COMPLETELY RESTORED TO THE SATISFACTION OF THE APPLICABLE AGENCY ENGINEER, AT THE CONTRACTOR'S SOLE EXPENSE.

16. ANY RELOCATION OF PUBLIC UTILITIES SHALL BE CONDUCTED IN ACCORDANCE WITH ANY AND ALL REQUIREMENTS OF THE UTILITY COMPANY INCLUDING FEES, BONDS, PERMITS AND WORKING CONDITIONS, ETC. THIS WORK SHALL BE DONE AT NO EXPENSE TO THE UTILITY COMPANY. THE OWNER SHALL PAY THE COST OF ALL SUCH RELOCATION WORK INCLUDING FEES, BONDS, PERMITS, ETC.

17. IF ARCHAEOLOGICAL MATERIALS ARE UNCOVERED DURING GRADING, TRENCHING OR OTHER EXCAVATION, EARTHWORK WITHIN 100 FEET OF THESE MATERIALS SHALL BE STOPPED UNTIL A PROFESSIONAL ARCHAEOLOGIST WHO IS CERTIFIED BY THE SOCIETY OF CALIFORNIA ARCHAEOLOGY (SCA) AND/OR THE SOCIETY OF PROFESSIONAL ARCHAEOLOGY (SOPA) HAS HAD AN OPPORTUNITY TO EVALUATE THE SIGNIFICANCE OF THE FIND AND SUGGEST APPROPRIATE MITIGATION MEASURES, IF THEY ARE DEEMED NECESSARY.

18. RFE ENGINEERING, INC. DOES NOT SPECIFY NOR RECOMMEND THE USE OR INSTALLATION OF ANY MATERIAL OR EQUIPMENT WHICH IS MADE FROM, OR WHICH CONTAINS ASBESTOS FOR USE IN THE CONSTRUCTION OF THESE IMPROVEMENTS. ANY PARTY INSTALLING OR USING SUCH MATERIAL OR EQUIPMENT SHALL BE SOLELY RESPONSIBLE FOR ALL INJURIES, DAMAGE OR LIABILITIES, OF ANY KIND, CAUSED BY THE USE OF SUCH MATERIALS OR EQUIPMENT. THE PROVISIONS OF THIS NOTE SHALL APPLY UNLESS THEY ARE EXPRESSLY WAIVED IN WRITING BY OWNER AND RFE ENGINEERING, INC.

PROJECT GENERAL NOTES (CONT):

19. SHOULD IT APPEAR THAT THE WORK TO BE DONE OR ANY MATTER RELATIVE THERETO IS NOT SUFFICIENTLY DETAILED OR EXPLAINED ON THESE PLANS, THE CONTRACTOR SHALL CONTACT RFE ENGINEERING, INC., AT (916) 772-7800 FOR SUCH FURTHER EXPLANATIONS AS MAY BE NECESSARY.

20. CONTRACTOR SHALL PROVIDE PROTECTIVE FENCING AROUND EXISTING TREES TO REMAIN. SEE OTHER NOTES ON THESE PLANS, PROJECT CONDITIONS OF APPROVAL, AND SPECIFIC JURISDICTIONAL REQUIREMENTS FOR SUCH FENCING.

21. ALL CONSTRUCTION SHALL BE IN ACCORDANCE WITH THE GEOTECHNICAL REPORT AND ALL ADDENDA REFERENCED ON SHEET C1.

22. THE CONTRACTOR SHALL COMPLY WITH ALL LOCAL REGULATIONS, LAWS AND ORDINANCES, INCLUDING ALLOWABLE CONSTRUCTION HOURS, CONSTRUCTION NOISE NEAR RESIDENCES, DUST CONTROL AND EROSION CONTROL.

23. THE CONTRACTOR SHALL BE RESPONSIBLE TO REVIEW ALL CONTRACT DOCUMENTS INCLUDING ALL PLANS AND SPECIFICATIONS PREPARED BY OTHER DISCIPLINES FOR THIS PROJECT PRIOR TO THE START OF CONSTRUCTION. SUCH REVIEW SHALL BE CONTINUOUS THROUGHOUT THE CONSTRUCTION PROCESS. ANYTIME THAT A CONFLICT BETWEEN SUCH PLANS AND SPECIFICATIONS IS IDENTIFIED, THE CONTRACTOR SHALL CONTACT RFE ENGINEERING, INC. AND OTHER APPLICABLE DISCIPLINES TO REQUEST A VERIFICATION OF THE DESIGN REQUIREMENTS AND A RESOLUTION TO SUCH CONFLICTS PRIOR TO CONSTRUCTION OF SUCH FACILITIES.

24. BEFORE EXECUTION OF ANY WORK, THE CONTRACTOR SHALL EXAMINE ACTUAL JOB CONDITIONS AND REPORT TO RFE ENGINEERING, INC. AND OWNER ANY ERROR, OMISSION, OR DISCREPANCY AFFECTING WORK. UPON COMMENCING CONSTRUCTION THE CONTRACT SHALL BE RESPONSIBLE FOR REPORTING ANY AND ALL CONFLICTS, ERRORS, OMISSIONS, ETC. TO RFE ENGINEERING, INC. IMMEDIATELY UPON DISCOVERY. IF SO DIRECTED BY THE ENGINEER OR CITY/COUNTY ENGINEER, THE CONTRACTOR SHALL STOP WORK UNTIL MITIGATION CAN BE MADE. ANY COST INCURRED RESULTING FROM THE CONTRACTOR'S FAILURE TO STOP WORK AS DIRECTED SHALL BE THE RESPONSIBILITY OF THE CONTRACTOR.

25. THE CONTRACTOR SHALL PROVIDE THE CIVIL ENGINEER "AS BUILT" DRAWINGS AT PROJECT COMPLETION. THE CONTRACTOR SHALL PROVIDE ONE COMPLETE ACCURATE SET OF RECORD CHANGES. THE CHANGES SHALL BE PLACED ON A CLEAN SET OF PROJECT DRAWINGS IN RED, AND GIVEN TO THE ENGINEER AT JOB COMPLETION.

26. THE ENGINEERS ESTIMATE OF QUANTITIES IS FOR DESIGN REFERENCE ONLY. THE CONTRACTOR SHALL BE SOLELY RESPONSIBLE FOR DETERMINING THE QUANTITIES FOR BID AND FIELD INSTALLATION. ALL CALCULATED EARTHWORK QUANTITIES FURNISHED FOR THIS PROJECT ARE APPROXIMATE. THE QUANTITIES HEREIN WERE CALCULATED TO FINISHED ROUGH GRADE AND EXISTING GROUND. THE ACTUAL MATERIALS MOVED ARE VARIABLE DEPENDENT UPON THE CONTRACTOR'S METHOD OF OPERATION. IT IS THE CONTRACTOR'S RESPONSIBILITY TO PROVIDE FOR ANY EXCESS OR SHORTAGE OF EARTH MATERIAL FOR THIS PROJECT AND NO ADDITIONAL PAYMENT WILL BE MADE.

27. THESE DRAWINGS ARE FOR THIS SPECIFIC PROJECT AND NO OTHER USE IS AUTHORIZED. RFE ENGINEERING, INC. DISCLAIMS ALL RESPONSIBILITY FOR CONSTRUCTION BEYOND WHAT IS SPECIFICALLY DESIGNED OR DETAILED HEREIN.

28. THE CONTRACTOR SHALL TAKE CARE TO PROTECT THE EXISTING SITE AND ADJACENT IMPROVEMENTS FROM DAMAGE. THE CONTRACTOR SHALL BE RESPONSIBLE FOR ANY DAMAGE RESULTING FROM THE CONSTRUCTION AND SHALL REPAIR OR MAKE REPLACEMENT TO CURRENT CITY/COUNTY STANDARDS. ALL SUCH WORK SHALL BE AT THE CONTRACTOR'S OWN EXPENSE. THE CONTRACTOR SHALL PERFORM THESE REPAIRS AND REMOVE ALL TRASH AND CONSTRUCTION DEBRIS AS DIRECTED BY RFE ENGINEERING, INC. OR THE CITY/COUNTY ENGINEER.

29. THE AGENCY, CITY/COUNTY ENGINEER, OWNER OR RFE ENGINEERING, INC. MAY REQUIRE THE CONTRACTOR TO UNCOVER ANY IMPROVEMENTS THAT HAVE BEEN COMPLETED WITHOUT PROPER INSPECTION AND/OR APPROVAL. IF THE INSTALLATION IS FOUND NOT TO MEET APPLICABLE STANDARDS OR PREVIOUSLY APPROVED ALTERNATIVES SHOWN ON THE PLANS, THE CONTRACTOR MAY BE REQUIRED TO REMOVE AND REPLACE SUCH IMPROVEMENTS AT HIS OWN EXPENSE.

30. THE CONTRACTOR IS RESPONSIBLE FOR PRESERVATION AND PROTECTION OF EXISTING SURVEY AND PROPERTY CORNER MONUMENTS THAT EXIST AT THE TIME OF CONSTRUCTION IN THE AREA WHERE CONSTRUCTION ACTIVITIES OCCUR. MONUMENTS DISTURBED, OR LOST, DUE TO CONSTRUCTION ACTIVITIES WILL REQUIRE THAT THE CONTRACTOR HAVE THEM REPLACED, IN KIND, BY A LICENSED CALIFORNIA LAND SURVEYOR, WHO WILL BE REQUIRED TO FILE WITH THE COUNTY EITHER A CORNER RECORD OR A RECORD OF SURVEY, WHICHEVER WILL MEET THE REQUIREMENTS OF THE LAND SURVEYOR'S ACT, SECTION 8771(B).

GENERAL PAVING NOTES:

1. CONSTRUCTION OF ALL PAVING SHALL BE CONSISTENT WITH REQUIREMENTS OUTLINED IN THE PROJECT GEOTECHNICAL ENGINEERING REPORT AND ALL ADDENDA.

2. PROPER PREPARATION OF THE SUBGRADE IS ESSENTIAL FOR OPTIMUM LONG-TERM PERFORMANCE OF THE CONCRETE PAVING. WHEN SUBGRADE IS SHAPED, LARGE EMBEDDED OBJECTS SHALL BE REMOVED AND THE TOP 12-INCHES OF SOIL SHALL BE THOROUGHLY MOISTURE CONDITIONED TO THE OPTIMUM MOISTURE CONTENT AND UNIFORMLY COMPACTED TO 95% RELATIVE COMPACTION. THE UPPER 6-INCHES OF SOIL SHALL BE THOROUGHLY MOISTURE CONDITIONED TO THE OPTIMUM MOISTURE CONTENT AND UNIFORMLY COMPACTED TO 95% RELATIVE COMPACTION FOR ALL STRUCTURAL SECTIONS SPECIFIED ON THESE PLANS. ALL UNSUITABLE SOIL SHALL BE REMOVED AND REPLACED WITH AN ACCEPTABLE ENGINEERED FILL.

3. CLASS 2 AGGREGATE BASE SHALL BE UNIFORM IN DEPTH AND COMPACTED TO 95% RELATIVE COMPACTION.

4. ACCEPTABLE TOLERANCES FOR FINE GRADING OF THE SUBGRADE AND AGGREGATE BASE ARE NO MORE THAN ¼-INCH ABOVE OR ½-INCH BELOW THE DESIGN GRADE.

5. PORTLAND CEMENT CONCRETE (PCC):
   - MINIMUM COMPRESSIVE STRENGTH: 4,000 PSI IN 28 DAYS
   - SLUMP: 3" TO 4"
   - AIR ENTRAINMENT: 5% TO 6%
   - AGGREGATE: MAXIMUM ¾ - INCH CRUSHED (ROUGH-TEXTURED, ANGULAR-SHAPED)
   - ADMIXTURES CONTAINING CHLORIDES AND SULFIDES ARE NOT ACCEPTABLE.

6. REINFORCING STEEL, IF SPECIFIED ON THE PLANS, SHALL BE CHAIRED AND LOCATED MID-SLAB DEPTH. REINFORCEMENT AND SPACING SHALL BE AS SPECIFIED ON THE PAVING PLAN. DEFORMED REINFORCEMENT SHALL BE GRADE 60 STEEL.

GENERAL PAVING NOTES CONT.:

7. HEAVY DUTY TRAFFIC RATED PCC SLABS SHALL BE CONSTRUCTED WITH THICKENED EDGES, AT LEAST TWICE THE SPECIFIED SLAB THICKNESS AND TAPERED 4-FEET WIDE MEASURED HORIZONTALLY FROM THE PERIMETER OF THE SLAB. SEE DETAILS.

8. FORMS SHALL BE STRAIGHT, FREE FROM WARPING, AND STRONG ENOUGH TO RESIST THE LATERAL PRESSURE OF THE CONCRETE. A FORM RELEASE AGENT SHALL BE APPLIED TO EASE STRIPPING.

9. CONCRETE SHALL BE PLACED CONTINUOUSLY AS CLOSE AS POSSIBLE TO ITS FINAL POSITION AND BE CONSOLIDATED.

10. IMMEDIATELY FOLLOWING STRIKE-OFF, THE SURFACE SHALL BE LEVELED WITH A BULLFLOAT OR A SCRAPING STRAIGHTEDGE. THE SURFACE SHALL NOT BE FINISHED MORE THAN NECESSARY TO REMOVE IRREGULARITIES. ALL EDGES, TOOLED JOINTS, AND ISOLATION JOINTS SHALL BE ROUNDED TO THE SPECIFIED RADIUS WITH APPROPRIATE TOOLS. THE USE OF HAND OR POWER FLOATS AND TROWELS IS NOT NECESSARY AND IS NOT RECOMMENDED.

11. AS SOON AS THE FINISHED CONCRETE HAS SET SUFFICIENTLY TO MAINTAIN A TEXTURE AND NO BLEED WATER REMAINS ON THE SURFACE, THE SURFACE CAN BE DRAGGED WITH A SHORT LENGTH OF DAMP BURLAP OR OTHER MATERIAL SUCH AS SYNTHETIC TURF CARPETING. AS AN ALTERNATIVE, THE SURFACE CAN BE BROOMED TO DEVELOP A SKID-RESISTANCE SURFACE AND UNIFORM APPEARANCE. SEE ARCHITECTURAL PLANS FOR ADDITIONAL SPECIAL CONCRETE FINISH REQUIREMENTS AND JOINT PATTERN REQUIREMENTS. UNLESS OTHERWISE SPECIFIED ON THE ARCHITECT'S PLANS, ALL CONCRETE SHALL HAVE A LIGHT BROOM FINISH.

12. THE CONCRETE SHALL BE PROTECTED FROM DAMAGE DURING THE CURING PROCESS.

13. CURING:
   - COLD TEMPERATURES - CONCRETE SHALL BE PROTECTED FROM FREEZING FOR AT LEAST 5-DAYS AFTER PLACEMENT. FOR FORECAST TEMPERATURES AROUND 32 TO 25 DEGREES FAHRENHEIT THE CONCRETE SHALL BE COVERED WITH POLYETHYLENE SHEETING. FOR COLDER TEMPERATURES, TWO SHEETS OF POLYETHYLENE SEPARATED BY 12-INCHES OF STRAW OR A SIMILAR DEGREE OF INSULATION.
   - WARM TEMPERATURES - WET CURING OR LIQUID MEMBRANE-FORMING CURING COMPOUND SHALL BE INITIATED IMMEDIATELY AFTER FINISHING IN SUNNY, WINDY, AND WARM CONDITIONS.
   - CONTRACTOR SHALL HAVE ENOUGH PLASTIC SHEETING AVAILABLE ON THE PROJECT SITE TO COMPLETELY COVER ANY SURFACES THAT MAY BE DAMAGED IN THE EVENT OF RAIN. THERE SHALL ALSO BE ADEQUATE WEIGHTS AVAILABLE TO KEEP THE PLASTIC SHEETING FROM BLOWING AWAY. FOR CONCRETE ON A SLOPE, DIVERSION SHALL BE PROVIDED FOR POTENTIAL RUN-ON TO PROTECT FROM WATER ABOVE WASHING ACROSS THE SURFACE.

14. CONCRETE JOINTS:

ISOLATION / EXPANSION JOINTS:

CONSTRUCT WHERE PCC MEETS FIXED FOUNDATIONS SUCH AS COLUMNS, BUILDING, MACHINERY FOUNDATIONS, WALLS, MANHOLES, DRAIN INLETS, UTILITY BOXES, ETC. ALL STRUCTURAL TUBING, PIPING, ETC. THAT EXTENDS UP THROUGH THE PCC SLAB SHALL BE WRAPPED WITH TWO LAYERS OF BUILDING PAPER OR ISOLATION JOINT MATERIAL TO BREAK BOND WITH PCC SLAB.

EXPANSION JOINT MATERIAL = ½ - INCH FELT EXPANSION FIBER BOARD, OR APPROVED EQUIVALENT.
FULL DEPTH OF PCC
WIDTH = ⅜ - INCH
RADIUS = ¼ - INCH

EXPANSION JOINT TO BE GREENSTREAK PAVING CAP SEAL OR APPROVED SEALANT IF SPECIFIED ON THE PLAN.

CONTRACTION CONTROL JOINTS HAND TOOLED OR SAWCUT

JOINT IS A SAW CUT, TROWEL CUT OR PLASTIC OR HARDBOARD PREFORMED STRIP MINIMUM OF ONE QUARTER THE DEPTH OF THE SLAB THICKNESS, MINIMUM 1 - INCH. THIS JOINT PROVIDES A WEAK PLANE IN THE SLAB WHERE CRACKING CAN OCCUR. MAXIMUM SPACING FOR ¾ - INCH MAXIMUM AGGREGATE IS 2 x SLAB THICKNESS (DEPTH) IN FEET (I.E. A 4-INCH SLAB WITH ¾" MAXIMUM AGGREGATE SHALL HAVE A MAXIMUM SPACING OF 8-FEET). MAXIMUM SPACING FOR AGGREGATE GREATER THAN ¾ - INCH SHALL BE 2.5 x SLAB THICKNESS IN FEET (I.E. A 4-INCH SLAB WITH AGGREGATE GREATER THAN ¾" SHALL HAVE A MAXIMUM SPACING OF 10-FEET). IN NO CASE SHALL SPACING BE GREATER THAN 15 - FEET.

SLAB THICKNESS (INCHES)	JOINT DEPTH (INCHES)	JOINT TROWEL RADIUS (INCHES)	MAXIMUM JOINT SPACING (FEET) (EACH DIRECTION)
4	1	⅜	8
5	1¼	⅜	10
6	1½	⅜	12
6 ½	1⅝	⅜	13
7	1¾	⅜	14
8	2	⅜	15

TOOLING OR EARLY-ENTRY DRY-CUT SAW JOINTS ARE DESIRED TO PLACE JOINTS BEFORE DEVELOPMENT OF TENSILE STRESSES THAT ARE GREAT ENOUGH TO INITIATE CRACKING, THUS INCREASING THE PROBABILITY OF CRACKS FORMING AT THE JOINT. CONTRACTION JOINT PATTERNS SHOULD DIVIDE PAVEMENTS INTO APPROXIMATELY SQUARES. THE LENGTH OF A PANEL SHOULD NOT BE MORE THAN 25% GREATER THAN ITS WIDTH.

CONSTRUCTION JOINTS

CONSTRUCTION JOINTS ARE STOPPING PLACES IN THE PROCESS OF CONSTRUCTION

BUTT TYPE CONSTRUCTION JOINT WITH DOWEL
SMOOTH STEEL DOWEL BAR COATED TO PREVENT BOND
MINIMUM 1-FOOT LONG - 6-INCHES IN EACH SIDE OF JOINT
EDGE EACH SIDE WITH 1/8-INCH RADIUS.

DOWELS SHALL BE PLACED A MINIMUM OF 12-INCHES AWAY FROM ANY JOINT INTERSECTION.

PREVENT BOND OF CONCRETE AT JOINT OR EXTEND REBAR 1' MINIMUM BEYOND INITIAL SECTION TO TIE IN SECONDARY SECTION.

GENERAL PAVING NOTES CONT.:

CONT'D
ALL NEW PCC PAVING SHALL BE TIED INTO EXISTING WITH 1/2-INCH STEEL DOWEL @ 12-INCHES O.C. EPOXY INTO EXISTING. DOWELS SHALL NOT BE WITHIN 12-INCHES OF EDGE OF CONCRETE OR JOINT INTERSECTION. EDGE NEW PCC WITH 1/8-INCH RADIUS AT JOINT.

SCORE JOINTS - HAND TROWELED FOR AESTHETICS ONLY. SEE ARCHITECTURE PLAN FOR PATTERN IF NOT SPECIFIED ON CIVIL PLANS - FIT ALL OTHER CONTRACTION AND CONSTRUCTION JOINTS INTO THIS PATTERN

15. ALL ISOLATION / EXPANSION JOINTS SHALL BE CAPPED WITH GREENSTREAK G-SEAL PAVING CAP SEAL PROFILE #610 OR #628 AS APPROPRIATE FOR USE.

16. ALL CONTRACTION CONTROL AND CONSTRUCTION JOINTS SHALL BE SEALED WITH SIKAFLEX SELF-LEVELING SEALANT (COLOR TO MATCH CONCRETE) OR APPROVED EQUIVALENT. JOINT WALLS AND ALL SURFACES TO WHICH THE SEALING MATERIAL IS TO ADHERE SHALL BE SURFACE DRY FOR AT LEAST THREE HOURS PRIOR TO SEALING. THE SURFACE OF THE SEALING COMPOUND SHALL BE A MAXIMUM OF 1/8-INCH BELOW THE LEVEL OF THE PCC SLAB SURFACE.

17. CONTRACTOR SHALL TAKE PRECAUTIONS TO REDUCE RAPID LOSS OF MOISTURE FROM THE CONCRETE AND REDUCE PLASTIC SHRINKAGE CRACKING, PRIOR TO PLACEMENT, DURING PLACEMENT AND UP TO 5-DAYS AFTER PLACEMENT AND FINISHING OF THE CONCRETE.

18. SEE ARCHITECTURAL PLANS FOR ADDITIONAL SPECIAL CONCRETE FINISH REQUIREMENTS AND JOINT PATTERN REQUIREMENTS. UNLESS OTHERWISE SPECIFIED ON THE ARCHITECT'S PLANS, ALL CONCRETE SHALL HAVE A LIGHT BROOM FINISH.

ASPHALT PAVING

(REFERENCE CALTRANS STANDARD SPECIFICATIONS SECTION 39)

1. ALL ASPHALT SHALL MEET CALTRANS TYPE A HMA SPECIFICATIONS.

2. FOR ASPHALT PAVEMENT THICKNESSES PLACED IN ONE SINGLE LIFT, THE GRADATION REQUIREMENTS SHALL BE AS FOLLOWS:

TYPE A HMA PAVEMENT THICKNESS	GRADATION
0.10 FEET	⅜ INCH
GREATER THAN 0.10 TO LESS THAN 0.20 FEET	½ INCH
0.20 TO LESS THAN 0.25 FEET	¾ INCH
0.25 FEET OR GREATER	¾ INCH OR 1 INCH

23. FOR PAVEMENT THICKNESS IN EXCESS OF 0.30 FEET, PAVEMENT SHALL BE PLACED IN MULTIPLE LIFTS NOT LESS THAN 0.15 FEET. WHEN PLACING ASPHALT IN LIFTS, THE TABLE BELOW IS APPLICABLE:

TYPE A HMA LIFT THICKNESS	GRADATION
0.15 TO LESS THAN 0.20 FEET	½ INCH
0.20 FEET TO LESS THAN 0.25 FEET	¾ INCH
0.25 FEET OR GREATER	¾ INCH OR 1 INCH

24. APPLY A TACK COAT BEFORE PLACING A SUBSEQUENT LIFT.

DUST MITIGATION NOTES:

1. ENCLOSE, COVER OR WATER ALL SOIL PILES TWICE DAILY.
2. WATER EXPOSED SOIL WITH ADEQUATE FREQUENCY TO KEEP SOIL MOIST AT ALL TIMES.
3. WATER ALL HAUL ROADS TWICE DAILY.
4. MAINTAIN AT LEAST TWO (2) FEET OF FREEBOARD ON TRUCKS WHEN HAULING LOADS.
5. MAINTAIN CONSTRUCTION EQUIPMENT (STATIONARY AND MOBILE) IN OPTIMUM RUNNING CONDITION.

CONSTRUCTION MATERIALS AND GRADING NOTES:

1. ALL CONSTRUCTION SHALL BE PERFORMED IN ACCORDANCE WITH FHA STANDARDS.
2. CONSTRUCTION MATERIALS AND WORKMANSHIP SHALL CONFORM TO THE CITY OF SACRAMENTO STANDARD SPECIFICATIONS. THE CONTRACTOR SHALL OBTAIN AND USE ALL APPLICABLE ADDENDUMS.
3. ALL SLOPE BANKS ARE 2:1 MAXIMUM UNLESS OTHERWISE NOTED.
4. ALL APPLICABLE FEES TO BE PAID AND PERMITS REQUIRED SHALL BE OBTAINED BY THE CONTRACTOR BEFORE COMMENCEMENT OF CONSTRUCTION.
5. MAXIMUM TOLERANCE FROM PAD ELEVATIONS SHALL BE +/- 0.2 FEET.
6. ANY GRADING OPERATIONS OUTSIDE OF SUBDIVISION BOUNDARY SHALL REQUIRE A RIGHT-OF-ENTRY.
7. ALL GRADING SHALL BE IN CONFORMANCE WITH THE CITY OF SACRAMENTO GRADING, EROSION, AND SEDIMENT CONTROL ORDINANCE (ORD. NO. 93-068).
8. GRADING, TRENCHING, CUTTING AND/OR FILLING WITHIN THE DRIP LINE OF THOSE TREES, DESIGNATED ON THE SITE PLAN FOR PRESERVATION, SHALL NOT OCCUR. NO ACTIONS SHALL BE TAKEN THAT WILL HARM THE HEALTH, VITALITY OR LONGEVITY OF THOSE TREES IDENTIFIED ON THE SITE PLAN FOR PRESERVATION.
9. THE CONTRACTOR IS HEREBY NOTIFIED THAT PRIOR TO COMMENCING CONSTRUCTION, HE IS RESPONSIBLE FOR CONTACTING THE UTILITY COMPANIES INVOLVED AND REQUESTING A VERIFICATION AT THE CONSTRUCTION SITE OF THE LOCATIONS OF THEIR UNDERGROUND UTILITIES WHERE SUCH FACILITIES MAY POSSIBLY CONFLICT WITH THE PLACEMENT OF IMPROVEMENTS AS SHOWN ON THESE IMPROVEMENT PLANS. THE CONTRACTOR OR ANY SUBCONTRACTOR FOR THIS PROJECT WILL BE REQUIRED TO NOTIFY MEMBERS OF UNDERGROUND SERVICE ALERT 48 HOURS IN ADVANCE OF PERFORMING WORK, BY CALLING THE TOLL FREE NUMBER 1-800-642-2444. EXCAVATIONS FOR THE PURPOSE OF THESE REQUIREMENTS, SHALL BE DEFINED AS BEING 18" (INCHES) OR MORE IN DEPTH.
10. WORKMANSHIP SHALL CONFORM TO THE CITY OF SACRAMENTO STANDARD SPECIFICATIONS DATED: JUNE, 2007. THE CONTRACTOR SHALL OBTAIN AND USE ALL APPLICABLE ADDENDUMS.
11. ALL GRADING SHALL COMPLY WITH THE RECOMMENDATIONS OF THE GEOTECHNICAL REPORT, SEE SHEET C1.
12. ALL SLOPE BANKS ARE 2:1 MAXIMUM UNLESS OTHERWISE NOTED.
13. MAXIMUM TOLERANCE FROM PAD ELEVATIONS SHALL BE +/- 0.2'.
14. ANY GRADING OPERATIONS OUTSIDE OF PROJECT BOUNDARY SHALL REQUIRE A RIGHT-OF-ENTRY.
15. ALL GRADING SHALL BE IN CONFORMANCE WITH THE CITY OF SACRAMENTO GRADING, EROSION, AND SEDIMENT CONTROL ORDINANCE (ORD. NO. 93-068).

NO.	REVISION	DATE	BY	APPR'D

	BY	CHECK
DESIGN	MJW	RFE
DRAWN	DCJ	RFE
QUANT.		

ORIGINAL SCALE IS IN INCHES 0 1 2

REGISTERED PROFESSIONAL ENGINEER ROBERT F. ETNICK No. C040666 Exp. 3-31-25 CIVIL STATE OF CALIFORNIA
11/13/2023

RFE ENGINEERING
2280 Douglas Blvd, Suite 160, Roseville, CA 95661
Ph: 916-772-7800 | www.rfeincorp.com

PROPERTY OWNER / DEVELOPER
NERRADSCALI CORPORATION
3960 KINGSBARNS DRIVE
ROSEVILLE, CA 95747
CONTACT: DARREN BROWN
PH: (916) 300-7963
EMAIL: DARRENBBROWN@COMCAST.NET

ON-SITE IMPROVEMENT PLANS FOR
NERRADSCALI SUBDIVISION
SACRAMENTO, CA 95838
APN: 237-0200-092

GENERAL NOTES 1

Sheet
C2.1

11/13/2023

W:\2021 Projects\21-188 905 North Ave Sac\Working CAD\ONSITE C2 NOTES.dwg Nov 13, 2023-09:24 am

CITY OF SACRAMENTO GENERAL NOTES:

1. ALL CONSTRUCTION MATERIALS AND WORKMANSHIP SHALL CONFORM TO THE CITY OF SACRAMENTO STANDARD SPECIFICATIONS, DATED NOVEMBER 2020. THE CONTRACTOR SHALL OBTAIN AND USE ALL APPLICABLE ADDENDUMS.

2. THE CONTRACTOR IS RESPONSIBLE FOR DETERMINING THE EXACT LOCATION OF ALL EXISTING UTILITIES AND FOR THE PROTECTION OF AND REPAIR OF DAMAGE TO THEM. CONTACT UNDERGROUND SERVICE ALERT 1-800-642-2444, 48 HOURS BEFORE WORK IS TO BEGIN.

3. FOR ALL TRENCH EXCAVATIONS 5 FEET OR MORE IN DEPTH, THE CONTRACTOR SHALL OBTAIN A PERMIT FROM THE DIVISION OF INDUSTRIAL SAFETY (2422 ARDEN WAY, SUITE 165, SACRAMENTO, PHONE 263-2800) PRIOR TO BEGINNING ANY EXCAVATION. A COPY OF THIS PERMIT SHALL BE AVAILABLE AT THE CONSTRUCTION SITE AT ALL TIMES.

4. THE CONTRACTOR SHALL BE RESPONSIBLE FOR AND FURNISH, INSTALL, AND MAINTAIN TEMPORARY SIGNS, BRIDGES, BARRICADES, FLAGMEN, AND OTHER FACILITIES TO ADEQUATELY SAFEGUARD THE GENERAL PUBLIC AND WORK, AND TO PROVIDE FOR THE PROPER ROUTING OF VEHICULAR AND PEDESTRIAN TRAFFIC. CONSTRUCTION OPERATIONS SHALL COMPLY WITH THE WORK AREA TRAFFIC CONTROL HANDBOOK (WATCH).

5. THE CONTRACTOR SHALL BE RESPONSIBLE FOR THE PROTECTION OF ALL EXISTING SURVEY MONUMENTS OR MARKERS DURING CONSTRUCTION.

6. THE CONTRACTOR SHALL MAINTAIN ALL EXISTING DRAINAGE AND SEWER FACILITIES WITHIN THE CONSTRUCTION AREA UNTIL NEW DRAINAGE AND SEWER IMPROVEMENTS ARE IN PLACE AND FUNCTIONING.

7. IF UNUSUAL AMOUNTS OF BONE, STONE OR ARTIFACTS ARE UNCOVERED, WORK WITHIN 50 METERS OF THE AREA SHALL CEASE IMMEDIATELY AND A QUALIFIED ARCHEOLOGIST AND A REPRESENTATIVE OF THE NATIVE AMERICAN HERITAGE COMMISSION SHALL BE CONSULTED TO DEVELOP, IF NECESSARY, MITIGATION MEASURES TO REDUCE ANY ARCHAEOLOGICAL IMPACT TO A LESS THAN SIGNIFICANT EFFECT BEFORE CONSTRUCTION RESUMES IN THE AREA.

8. COST TO REMOVE AND REPLACE EXISTING PAVEMENT OVER THE WATER, STORM AND SANITARY LINE TRENCHES SHALL BE INCLUDED IN THE PRICE BID FOR PIPE IN PLACE. REPLACEMENT SHALL BE 4" AC AND 12" AB, MINIMUM, OR INDICATED ON THE PLANS.

9. PIPE AND MANHOLE DIMENSIONS ARE TO THE CENTERLINE, UNLESS OTHERWISE NOTED.

10. ALL TAPS 24 INCHES AND SMALLER INTO SEWER & DRAIN MANHOLES SHALL BE CORE BORED WITH KOR-N-SEAL TAPS OR APPROVED EQUAL.11. ANY WATER ENTERING THE SANITARY SEWER SYSTEM TO BE CONSTRUCTED UNDER THESE PLANS SHALL NOT BE DISCHARGED TO THE EXISTING SYSTEM. PLUGS MUST BE INSTALLED IN EXISTING MANHOLES AS NECESSARY TO PERMIT PUMPING THE NEW SYSTEM CLEAR OF WATER AND DEBRIS PRIOR TO ACCEPTANCE. CARE SHALL BE EXERCISED IN LOCATING PLUGS TO AVOID INTERRUPTING SERVICES TO EXISTING CONNECTIONS. MORTAR OR BRICK PLUGS MUST BE USED, INFLATABLE DEVICES ARE NOT SATISFACTORY.

12. DRAIN PIPE MATERIAL SHALL BE REINFORCED CONCRETE PIPE C-76 CL III, NON-REINFORCED CONCRETE PIPE C-14 CL III, PVC SDR 35, OR AS SPECIFIED ON PLANS. IN ALL CASES, JOINTS FOR CONCRETE PIPE SHALL BE RUBBER GASKETED JOINTS.

13. DRAIN INLET LEADS SHALL BE PVC C-900 CL 150, RCP C-76 CL III, OR NON-REINFORCED CONCRETE C-14 CL III.

14. SANITARY SEWER PIPE MAINS SHALL BE CONSTRUCTED OF V.C.P., A.B.S. OR P.V.C. UNLESS OTHERWISE SPECIFIED ON THE PLANS.

15. AGGREGATE SUBBASE SHALL CONFORM TO CALTRANS SPECIFICATIONS DATED: JULY, 1992 A.S.B., SECTION 25.

16. A STORMWATER PERMIT MUST BE OBTAINED WHEN CONSTRUCTION ACTIVITY RESULTS IN SOIL DISTURBANCE OF ONE (1) OR MORE ACRES. THE STATE WATER RESOURCES CONTROL BOARD, DIVISION OF WATER QUALITY, STORMWATER PERMIT, P.O. BOX 1977, SACRAMENTO, CA 95812-1977, SHALL BE CONTACTED TO OBTAIN THE PERMIT PRIOR TO BEGINNING CONSTRUCTION.

17. IF WORK SHOWN ON THESE PLANS HAS NOT COMMENCED WITHIN TWO YEARS FROM THE DATE OF THE CITY'S ACCEPTANCE OF THE PLANS, A SUBSEQUENT PLAN REVIEW AT THE CITY'S DISCRETION AND THE DEVELOPERS'S EXPENSE MAY BE NECESSARY.

18. THE CONTRACTOR SHALL COMPLY WITH THE CITY OF SACRAMENTO ADMINISTRATIVE AND TECHNICAL MANUAL FOR GRADING/EROSION AND SEDIMENT CONTROL. CONTRACTOR SHALL HAVE ALL APPROPRIATE EROSION AND SEDIMENT CONTROL MEASURES IN PLACE FOR THE WINTER MONTHS PRIOR TO OCTOBER 1AND MUST ENSURE THAT THE CONSTRUCTION SITE IS PREPARED PRIOR TO THE ONSET OF ANY STORM.

CITY OF SACRAMENTO WATER NOTES:

REVISED 03/25/2021

1. ALL CONSTRUCTION AND MATERIAL ASSOCIATED WITH THIS PLAN SHALL BE IN ACCORDANCE WITH THE CITY OF SACRAMENTO STANDARD SPECIFICATIONS, DATED NOVEMBER 2020 AND ALL APPLICABLE ADDENDA AND STANDARD DRAWINGS.

2. CONTRACTOR SHALL CALL 808-6810 FOR A PUBLIC WORKS CONSTRUCTION INSPECTOR A MINIMUM OF 48 HRS PRIOR TO BEGINNING OF WORK WITHIN THE RIGHT-OF-WAY.

3. THE CITY OF SACRAMENTO STANDARD DRAWINGS HAVE BEEN MODIFIED. THE CONTRACTOR SHALL BE IN POSSESSION OF CURRENT STANDARD WATER DRAWINGS (W). COPIES OF THESE DRAWINGS CAN BE DOWNLOADED FROM HTTP://WWW.CITYOFSACRAMENTO.ORG/UTILITIES/RESOURCES.

4. THE CONTRACTOR SHALL PAY ALL FEES FOR TAPS, TIE-IN CONNECTIONS, AND METER INSTALLATION IN ADVANCE AT THE COMMUNITY DEVELOPMENT DEPARTMENT OFFICE AT 300 RICHARDS BLVD., THIRD FLOOR PUBLIC COUNTER. FEES ARE SUBJECT TO CHANGE EVERY JULY 1ST OR AT ANY TIME. FOR CURRENT FEES VISIT HTTPS://WWW.CITYOFSACRAMENTO.ORG/ONLINE-SERVICES/FEECHARGESEARCH. THE PUBLIC COUNTER IS CURRENTLY CLOSED DUE TO COVID-19, FOR PAYMENT OF METER AND/OR TAP FEES ONLINE OR MAIL CONTACT A UTILITIES REPRESENTATIVE AT DOUDEVELOPMENTREVIEW@CITYOFSACRAMENTO.ORG OR 916-808-7890 FOR PAYMENT INSTRUCTION.

5. AT THE TIME OF FEE PAYMENT THE CONTRACTOR SHALL PROVIDE A COPY OF ALL APPROVED PLAN SHEETS SHOWING DEPARTMENT OF UTILITIES APPROVAL STAMPS.

6. THE DEPARTMENT OF UTILITIES WILL NOT INSTALL TAPS OR METERS UNLESS (A) ALL FEES HAVE BEEN PAID AND (B) PRIVATE ON-SITE PIPING HAS SUCCESSFULLY PASSED THE PLUMBING INSPECTIONS.

7. METERS WILL BE INSTALLED BY THE CITY AFTER PAYMENT OF FEES. CALL 808-4027 FOR METER ARRANGEMENT.

8. CONTRACTOR SHALL FURNISH, INSTALL AND TEST APPROVED R.P ASSEMBLIES, AND DOUBLE CHECK VALVES PER APPLICABLE W DRAWINGS

9. THE CONTRACTOR SHALL SCHEDULE ALL WATER TAPS, METER INSTALLATIONS AND SHUT DOWNS WITH THE PUBLIC WORKS INSPECTOR. CALL 808-6810 AT LEAST 14 DAYS ADVANCE FOR SCHEDULING A TAP OR METER INSTALLATION.

10. WITHOUT EXCEPTION, CONTRACTOR SHALL NOT OPEN/CLOSE ANY VALVES ON EXISTING CITY WATER MAINS.

11. ALL WATER SERVICE CONNECTIONS HAVE BEEN SET UP AS:
    - FULL SERVICE TAP- CITY WILL EXCAVATE TRENCH, INSTALL TAP, GATE VALVE AND SERVICE CONNECTION FROM MAIN LINE TO THE POINT OF SERVICE. THE CITY WILL ALSO BACKFILL THE TRENCH AND RESTORE THE SURFACE/PAVEMENT. IF THE FULL SERVICE IS FOR THE INSTALLATION OF A PUBLIC FIRE HYDRANT, THE FIRE HYDRANT ASSEMBLY IS INCLUDED.
    - EASEMENT TAP (4" AND LARGER SERVICE) - THE CONTRACTOR SHALL PROVIDE EXCAVATION AND EXPOSE THE MAIN LINE FOR THE CITY CREW TO INSTALL A TAP AND A GATE VALVE ONLY. CONTRACTOR IS REQUIRED TO INSTALL SERVICE CONNECTION FROM THE GATE VALVE TO THE POINT OF SERVICE AND ALL NECESSARY APPURTENANCES. THE CONTRACTOR ALSO IS REQUIRED TO BACKFILL THE TRENCH AND RESTORE THE SURFACE /PAVEMENT.
    - EASEMENT TAP (2" AND SMALLER SERVICE) - THE CONTRACTOR SHALL PROVIDE EXCAVATION AND EXPOSE THE MAIN LINE FOR THE CITY CREW TO INSTALL A TAP, A CORPORATION STOP AND A SERVICE CONNECTION. CONTRACTOR SHALL BACKFILL THE TRENCH AND RESTORE THE SURFACE/PAVEMENT.

12. IF CONSTRUCTION WATER IS NEEDED, THE CONTRACTOR MAY REQUEST FOR A TEMPORARY PUBLIC FIRE HYDRANT USE PERMIT. CALL 808-5454.

CITY OF SACRAMENTO EROSION AND SEDIMENT CONTROL NOTES:

1. THE CONTRACTOR SHALL FOLLOW THE GUIDELINES FOR THE CITY OF SACRAMENTO'S "ADMINISTRATIVE AND TECHNICAL PROCEDURES MANUAL FOR GRADING AND EROSION AND SEDIMENT CONTROL" FOR THE MEASURES SHOWN OR STATED ON THESE PLANS.

2. CONTRACTOR MUST ENSURE THAT THE CONSTRUCTION SITE IS PREPARED PRIOR TO THE ONSET OF ANY STORM. CONTRACTOR SHALL HAVE ALL EROSION AND SEDIMENT CONTROL MEASURES IN PLACE FOR THE WINTER MONTHS PRIOR TO OCTOBER 1.

3. ALL EROSION AND SEDIMENT CONTROL MEASURES SHALL BE MAINTAINED UNTIL DISTURBED AREAS ARE STABILIZED. CHANGES TO THIS EROSION AND SEDIMENT CONTROL PLAN SHALL BE MADE TO MEET FIELD CONDITIONS ONLY WITH THE APPROVAL OF OR AT THE DIRECTION OF A REPRESENTATIVE OF THE DEPARTMENT OF UTILITIES.

4. THIS PLAN MAY NOT COVER ALL THE SITUATIONS THAT ARISE DURING CONSTRUCTION DUE TO UNANTICIPATED FIELD CONDITIONS. VARIATIONS MAY BE MADE TO THE PLAN IN THE FIELD SUBJECT TO THE APPROVAL OF OR AT THE DIRECTION OF A REPRESENTATIVE OF THE DEPARTMENT OF UTILITIES.

5. ALL EROSION AND SEDIMENT CONTROL MEASURES SHALL BE CHECKED BEFORE AND AFTER ALL STORMS TO ENSURE MEASURES ARE FUNCTIONING PROPERLY.

6. CONTRACTOR SHALL MAINTAIN A LOG AT THE SITE OF ALL INSPECTIONS OR MAINTENANCE OF BMPS, AS WELL AS, ANY CORRECTIVE CHANGES TO THE BMPS OR EROSION AND SEDIMENT CONTROL PLAN.

7. IN AREAS WHERE SOIL IS EXPOSED, PROMPT REPLANTING WITH NATIVE COMPATIBLE, DROUGHT-RESISTANT VEGETATION SHALL BE PERFORMED. NO AREAS WILL BE LEFT EXPOSED OVER THE WINTER SEASON.

8. THE CONTRACTOR SHALL INSTALL THE STABILIZED CONSTRUCTION ENTRANCE PRIOR TO COMMENCEMENT OF GRADING. LOCATION OF THE ENTRANCE MAY BE ADJUSTED BY THE CONTRACTOR TO FACILITATE GRADING OPERATIONS. ALL CONSTRUCTION TRAFFIC ENTERING THE PAVED ROAD MUST CROSS THE STABILIZED CONSTRUCTION ENTRANCE. THE STABILIZED CONSTRUCTION ENTRANCE SHALL REMAIN IN PLACE UNTIL THE ROAD BASE ROCK COURSE IS COMPLETED.

9. ALL SEDIMENT DEPOSITED ON PAVED ROADWAYS SHALL BE SWEPT AT THE END OF EACH WORKING DAY OR AS NECESSARY.

   CONTRACTOR SHALL PLACE _______________ AROUND ALL NEW DRAINAGE STRUCTURE OPENINGS IMMEDIATELY AFTER THE STRUCTURE OPENING IS CONSTRUCTED. THESE _______________ SHALL BE MAINTAINED AND REMAIN IN PLACE UNTIL CONSTRUCTION IS COMPLETED.

10. CONTRACTOR SHALL IMPLEMENT HOUSEKEEPING PRACTICES AS FOLLOWS:

    A. SOLID WASTE MANAGEMENT:

    PROVIDE DESIGNATED WASTE COLLECTION AREAS AND CONTAINERS. ARRANGE FOR REGULAR REMOVAL AND DISPOSAL. CLEAR SITE OF TRASH INCLUDING ORGANIC DEBRIS, PACKAGING MATERIALS, SCRAP OR SURPLUS BUILDING MATERIALS AND DOMESTIC WASTE DAILY.

    B. MATERIAL DELIVERY AND STORAGE:

    PROVIDE A DESIGNATED MATERIAL STORAGE AREA WITH SECONDARY CONTAINMENT SUCH AS BERMING. STORE MATERIAL ON PALLETS AND PROVIDE COVERING FOR SOLUBLE MATERIALS. RELOCATE STORAGE AREA INTO BUILDING SHELL WHEN POSSIBLE. INSPECT AREA WEEKLY.

    C. CONCRETE WASTE:

    PROVIDE A DESIGNATED AREA FOR A TEMPORARY PIT TO BE USED FOR CONCRETE TRUCK WASH-OUT. DISPOSE OF HARDENED CONCRETE OFFSITE. AT NO TIME SHALL A CONCRETE TRUCK DUMP ITS WASTE AND CLEAN ITS TRUCK INTO THE CITY STORM DRAINS VIA CURB AND GUTTER. INSPECT DAILY TO CONTROL RUNOFF, AND WEEKLY FOR REMOVAL OF HARDENED CONCRETE.

    D. PAINT AND PAINTING SUPPLIES:

    PROVIDE INSTRUCTION TO EMPLOYEES AND SUBCONTRACTORS REGARDING REDUCTION OF POLLUTANTS INCLUDING MATERIAL STORAGE, USE, AND CLEAN UP. INSPECT SITE WEEKLY FOR EVIDENCE OF IMPROPER DISPOSAL.

    E. VEHICLE FUELING, MAINTENANCE AND CLEANING:

    PROVIDE A DESIGNATED FUELING AREA WITH SECONDARY CONTAINMENT SUCH AS BERMING. DO NOT ALLOW MOBILE FUELING OF EQUIPMENT. PROVIDE EQUIPMENT WITH DRIP PANS. RESTRICT ONSITE MAINTENANCE AND CLEANING OF EQUIPMENT TO A MINIMUM. INSPECT AREA WEEKLY.

    F. HAZARDOUS WASTE MANAGEMENT:

    PREVENT THE DISCHARGE OF POLLUTANTS FROM HAZARDOUS WASTES TO THE DRAINAGE SYSTEM THROUGH PROPER MATERIAL USE, WASTE DISPOSAL AND TRAINING OF EMPLOYEES. HAZARDOUS WASTE PRODUCTS COMMONLY FOUND ON-SITE INCLUDE BUT ARE NOT LIMITED TO PAINTS & SOLVENTS, PETROLEUM PRODUCTS, FERTILIZERS, HERBICIDES & PESTICIDES, SOIL STABILIZATION PRODUCTS, ASPHALT PRODUCTS AND CONCRETE CURING PRODUCTS.

TREE PRESERVATION MEASURES FOR PROTECTED TREES

1. TREE PROTECTION ZONE (TPZ) - THE AREA AROUND A TREE WITHIN THE OUTERMOST CIRCUMFERENCE OF THE CANOPY OR AS SET FORTH IN A TREE PROTECTION PLAN.

2. TREES TO BE PRESERVED WITHIN OR ADJACENT TO THE CONSTRUCTION AREA SHALL BE PROTECTED FROM DISTURBANCE PRIOR TO AND THROUGHOUT CONSTRUCTION BY THE FOLLOWING METHODS OR AS APPROVED BY THE CITY ARBORIST:

   a. PLACING CHAIN LINK FENCING AT THE EDGE OF THE TPZ. MINIMUM FENCING HEIGHT IS 60 INCHES.
   b. WHEN THE FULL TPZ CANNOT BE ENCLOSED BY CHAIN LINK FENCING, THE APPLICANT SHALL PROVIDE PROTECTION FOR THE TRUNK AND THE SOIL WITHIN THE ROOT ZONE AS APPROVED BY THE CITY ARBORIST. ACCEPTED PRACTICES MAY BE TO WRAP FOAM AROUND THE TRUNK AND SECURING 2X4S VERTICALLY AROUND ALL SIDES IN ADDITION TO 4-6" OF WOOD CHIP MULCH, ¾ INCH PLYWOOD OR TRENCH PLATES ON THE GROUND WITHIN THE TPZ.

3. PROTECTION MEASURES SHALL REMAIN IN PLACE THROUGHOUT THE DURATION OF THE PROJECT, INCLUDING LANDSCAPE INSTALLATION.

4. ANY NECESSARY TREE PRUNING, INCLUDING PRUNING FOR CLEARANCE FOR EQUIPMENT OR FOR STRUCTURES SHALL BE SUPERVISED OR PERFORMED BY THE PROJECT ARBORIST WHO SHALL BE AN INTERNATIONAL SOCIETY OF ARBORICULTURE CERTIFIED ARBORIST OR AN ASCA REGISTERED CONSULTING ARBORIST. IF THE PRUNING WILL OCCUR ON A CITY STREET TREE OR A PRIVATE PROTECTED TREE, A SEPARATE TREE PERMIT FROM URBAN FORESTRY WILL BE REQUIRED.

5. EXCAVATION, GRADING OR TRENCHING WITHIN THE TPZ TREE SHALL EMPLOY ONE OF THE FOLLOWING METHODS: HYDRO-EXCAVATION, PNEUMATIC EXCAVATION OR HAND DIGGING.

6. GRADING OPERATIONS, INCLUDING CUTS, FILLS, TRENCHING OR OTHER EXCAVATIONS ARE NOT ALLOWED UNLESS SEPARATELY PERMITTED BY URBAN FORESTRY AND SUPERVISED BY THE PROJECT ARBORIST.

7. WHERE GRADING IS NECESSARY WITHIN THE TREE PROTECTION ZONE AND PERMITTED, THE WORK SHALL BE DONE UNDER THE SUPERVISION OF THE PROJECT ARBORIST WITH PRIOR APPROVAL BY THE CITY ARBORIST. IN SOME CASES, BORING OR DRILLING MAY BE REQUIRED. WHERE GRADING IS APPROVED, THE NATURAL TOPOGRAPHY SHALL REMAIN AS UNDISTURBED AS POSSIBLE.

8. STORAGE OF ANY MATERIALS, PARKING VEHICLES OR EQUIPMENT, FUELING AND OTHER ACTIONS DETRIMENTAL TO THE CONDITION OF THE TREE ARE NOT ALLOWED WITHIN THE TPZ.

9. ALL STREET TREES SHALL BE WATERED REGULARLY THROUGHOUT THE CONSTRUCTION PROCESS PER PROJECT ARBORIST'S RECOMMENDATIONS.

10. ALL WORK WITHIN THE DRIPLINE OF A CITY TREE OR A PRIVATE PROTECTED TREE SHALL BE SEPARATELY PERMITTED AND SUPERVISED BY AN ISA CERTIFIED ARBORIST WHO SHALL MAKE RECOMMENDATIONS TO MINIMIZE THE IMPACT OF APPROVED WORK ON THE TREES.

11. THE CONTRACTOR SHALL BE FINANCIALLY RESPONSIBLE FOR ANY DAMAGE TO THE CITY TREES ASSOCIATED WITH THE PROJECT. ACCIDENTAL OR NEGLIGENT ACTIONS THAT DAMAGE CITY TREES MAY RESULT IN A PENALTY. THE MONETARY VALUE OF ANY SUCH DAMAGES WILL BE APPRAISED BY THE CITY URBAN FORESTER OR HIS AUTHORIZED REPRESENTATIVE AND SHALL BE EXPRESSED AS THE MONETARY EQUIVALENT OF ALL LABOR AND MATERIALS REQUIRED TO BRING THE TREE IN QUESTION TO A STATE OF COMPARABLE UTILITY WITH REGARDS TO ITS CONDITION AND FUNCTION PRIOR TO THE BEGINNING OF THE PROJECT.

CITY OF SACRAMENTO GRADING NOTES:

1. ALL CONSTRUCTION SHALL CONFORM TO THESE PLANS AND THE LATEST EDITION OF THE CITY OF SACRAMENTO STANDARD SPECIFICATIONS NOVEMBER 2020, WHICH IS AT CITY WEB-SITE: HTTP://WWW.CITYOFSACRAMENTO.ORG/UTILITIES/RESOURCES/SPECS-AND-DRAWINGS

2. THE CONTRACTOR SHALL OBTAIN AND USE ALL APPLICABLE ADDENDUMS.

3. ALL CONSTRUCTION SHALL BE PERFORMED IN ACCORDANCE WITH FHA STANDARDS.

4. ALL GRADING SHALL BE IN CONFORMANCE WITH THE CITY OF SACRAMENTO GRADING, EROSION AND SEDIMENT CONTROL ORDINANCE (ORD. NO. 93-068).

5. ALL GRADING SHALL COMPLY WITH THE RECOMMENDATIONS OF THE SOIL AND GEOLOGICAL INVESTIGATION PREPARED BY: ____________________.

6. ALL APPLICABLE FEES TO BE PAID AND PERMITS REQUIRED SHALL BE OBTAINED BY THE CONTRACTOR BEFORE COMMENCEMENT OF CONSTRUCTION.

7. ALL SLOPE BANKS ARE 2:1 MAXIMUM UNLESS OTHERWISE NOTED.

8. MAXIMUM TOLERANCE FROM PAD ELEVATIONS SHALL BE +/- 0.2 FEET.

9. THE CONTRACTOR IS HERBY NOTIFIED THAT PRIOR TO COMMENCING CONSTRUCTION, HE IS RESPONSIBLE FOR CONTACTING THE UTILITY COMPANIES INVOLVED AND REQUESTING A VERIFICATION AT THE CONSTRUCTION SITE OF THE LOCATIONS OF THEIR UNDERGROUND UTILITIES WHERE SUCH FACILITIES MAY POSSIBLY CONFLICT WITH THE PLACEMENT OF IMPROVEMENTS AS SHOWN ON THESE IMPROVEMENT PLANS. THE CONTRACTOR OR ANY SUBCONTRACTOR FOR THIS PROJECT WILL BE REQUIRED TO NOTIFY MEMBERS OF UNDERGROUND SERVICE ALERT 48 HOURS IN ADVANCE OF PERFORMING WORK, BY CALLING THE TOLL FREE NUMBER 1-800-642-2444. EXCAVATIONS FOR THE PURPOSE OF THESE REQUIREMENTS SHALL BE DEFINED AS BEING 18" (INCHES) OR MORE IN DEPTH.

10. ALL FILL WITHIN PAVED AREAS SHALL BE 95% COMPACTION. ALL OTHER FILL SHALL BE 90% COMPACTION. UNLESS OTHERWISE NOTED IN THE GEOTECHNICAL REPORT.

11. SOIL DENSITIES SHALL BE CERTIFIED BY THE GEOTECHNICAL ENGINEER. THE GEOTECHNICAL ENGINEER SHALL SUBMIT WRITTEN CERTIFICATION TO THE CONSULTING ENGINEER, THE OWNER AND THE CITY ENGINEER.

12. THE CONTRACTOR IS RESPONSIBLE FOR TEMPORARY EROSION CONTROL, SHOULD THE PROJECT BE UNDER CONSTRUCTION BETWEEN OCTOBER 1 AND APRIL 15. TEMPORARY EROSION CONTROL SHALL CONSIST OF, BUT NOT BE LIMITED TO, CONSTRUCTING SUCH FACILITIES AND TAKING SUCH MEASURES AS ARE NECESSARY TO PREVENT, CONTROL, AND ABATE WATER, MUD AND EROSION DAMAGE TO PUBLIC AND PRIVATE PROPERTY AS A RESULT OF THE CONSTRUCTION OF THIS PROJECT. BY OCTOBER 1ST OF EACH YEAR, SUCH TEMPORARY EROSION CONTROL FEATURES AS ARE NECESSARY TO PREVENT DAMAGE DURING THE FORTHCOMING WINTER SEASON SHALL BE CONSTRUCTED AND FUNCTIONING. MUD AND SILT SHALL BE SETTLED OUT OF THE STORM RUNOFF BEFORE SAID RUNOFF LEAVES THE CONSTRUCTION SITE, ENTERS STORM DRAIN SYSTEMS, OR ENTERS A NATURAL CHANNEL.

13. SHOULD ANY PREHISTORIC (ARROWHEADS, MORTAR, HUMAN BONES) OR HISTORIC ARTIFACTS (GLASS, CERAMICS, METALS, NAILS) BE EXPOSED DURING EXCAVATION, GRADING OR CONSTRUCTION OPERATIONS, ALL WORK SHALL CEASE IMMEDIATELY WITHIN 50 METERS OF THE FOUND MATERIAL(S) AND THE COMMUNITY DEVELOPMENT DEPARTMENT SHALL BE IMMEDIATELY NOTIFIED. A QUALIFIED ARCHAEOLOGIST SHALL BE CONSULTED TO DETERMINE WHETHER ANY SUCH MATERIAL(S) ARE SIGNIFICANT PRIOR TO CONTINUING EXCAVATION, GRADING OR CONSTRUCTION ACTIVITIES AT THE ARCHAEOLOGIAL SITE. IF NECESSARY, FURTHER MITIGATION MEASURES MAY BE REQUIRED TO FURTHER REDUCE ANY ARCHAEOLOGICAL IMPACT TO A LESS THAN SIGNIFICANT LEVEL BEFORE CONSTRUCTION CONTINUES. STANDARIZED PROCEDURES FOR EVALUATION OF ACCIDENTAL FINDS AND DISCOVERY OF HUMAN REMAINS SHALL BE FOLLOWED AS PRESCRIBED IN APPENDIX K OF THE CALIFORNIA ENVIRONMENTAL QUALITY ACT.

14. GRADING, TRENCHING, CUTTING AND/OR FILLING WITHIN THE DRIP LINE OF THOSE TREES, DESIGNATED ON THE SITE PLAN FOR PRESERVATION, SHALL NOT OCCUR. NO ACTIONS SHALL BE TAKEN THAT WILL HARM THE HEALTH, VITALITY OR LONGEVITY OF THOSE TREES IDENTIFIED ON THE SITE PLAN FOR PRESERVATION.

15. NO REFULING, LUBRICANTION OR MAINTENANCE OF EARTHMOVING OR OTHER CONSTRUCTION VEHICLES SHALL BE DONE ANYWHERE ON THE SITE EXCEPT WITHIN APPROVED CONSTRUCTION STAGING AREAS.

16. ANY GRADING OPERATIONS OUTSIDE OF SUBDIVISION BOUNDARY SHALL REQUIRE A RIGHT-OF-ENTRY.

GENERAL PROTECTION GUIDELINES FOR TREES PLANNED FOR PRESERVATION

1. GREAT CARE MUST BE EXERCISED WHEN WORK IS CONDUCTED UPON OR AROUND PROTECTED TREES. THE PURPOSE OF THESE GENERAL PROTECTION MEASURES IS TO PROVIDE GUIDELINES TO PROTECT THE HEALTH OF THE AFFECTED PROTECTED TREES. THESE GUIDELINES APPLY TO ALL ENCROACHMENTS INTO THE PROTECTED ZONE OF A PROTECTED TREE, AND MAY BE INCORPORATED INTO TREE PERMITS AND/OR OTHER CONDITIONS OF APPROVAL AS DEEMED APPROPRIATE BY THE APPLICABLE GOVERNING BODY.

2. A CIRCLE WITH A RADIUS MEASUREMENT FROM THE TRUNK OF THE TREE TO THE TIP OF ITS LONGEST LIMB, PLUS ONE FOOT, SHALL CONSTITUTE THE CRITICAL ROOT ZONE PROTECTION AREA OF EACH PROTECTED TREE. LIMBS MUST NOT BE CUT BACK IN ORDER TO CHANGE THE DRIPLINE. THE AREA BENEATH THE DRIPLINE IS A CRITICAL PORTION OF THE ROOT ZONE AND DEFINES THE MINIMUM PROTECTED AREA OF EACH PROTECTED TREE. REMOVING LIMBS THAT MAKE UP THE DRIPLINE DOES NOT CHANGE THE PROTECTED AREA.

3. ANY PROTECTED TREES ON SITE WHICH REQUIRE PRUNING SHALL BE PRUNED BY AN ISA CERTIFIED ARBORIST PRIOR TO THE START OF CONSTRUCTION WORK. ALL PRUNING SHALL BE IN ACCORDANCE WITH THE AMERICAN NATIONAL STANDARDS INSTITUTE (ANSI) A300 PRUNING STANDARDS, ANSI STANDARD 2133.1-2000 REGARDING SAFETY PRACTICES, AND THE INTERNATIONAL SOCIETY OF ARBORICULTURE (ISA) "TREE PRUNING GUIDELINES" AND BEST MANAGEMENT PRACTICES.

4. PRIOR TO INITIATING CONSTRUCTION OR DEMOLITION, TEMPORARY CHAINLINK FENCING SHALL BE INSTALLED AT LEAST ONE FOOT OUTSIDE THE ROOT PROTECTION ZONE OF THE PROTECTED TREES IN ORDER TO AVOID DAMAGE TO THE TREE CANOPIES AND ROOT SYSTEMS. FENCING SHALL BE INSTALLED IN ACCORDANCE WITH THE APPROVED FENCING PLAN PRIOR TO THE COMMENCEMENT OF ANY GRADING OPERATIONS OR SUCH OTHER TIME AS DETERMINED BY THE REVIEW BODY. THE DEVELOPER SHALL CONTACT THE PROJECT ARBORIST AND THE PLANNING DEPARTMENT FOR AN INSPECTION OF THE FENCING PRIOR TO COMMENCING CONSTRUCTION ACTIVITIES ON SITE.

5. SIGNS SHALL BE INSTALLED ON THE PROTECTIVE FENCE IN FOUR (4) EQUIDISTANT LOCATIONS AROUND EACH INDIVIDUAL PROTECTED TREE. THE SIZE OF EACH SIGN MUST BE A MINIMUM OF TWO (2) FEET BY TWO (2) FEET AND MUST CONTAIN THE FOLLOWING LANGUAGE:
   WARNING: THIS FENCE SHALL NOT BE REMOVED OR RELOCATED WITHOUT WRITTEN AUTHORIZATION FROM THE CITY OF SACRAMENTO.

6. ONCE APPROVAL HAS BEEN OBTAINED BY THE CITY OF SACRAMENTO PROTECTIVE FENCING SHALL REMAIN IN PLACE THROUGHOUT THE ENTIRE CONSTRUCTION PERIOD AND SHALL NOT BE REMOVED, RELOCATED, TAKEN DOWN OR OTHERWISE MODIFIED IN WHOLE OR IN PART WITHOUT PRIOR WRITTEN AUTHORIZATION FROM THE AGENCY, OR AS DEEMED NECESSARY BY THE PROJECT ARBORIST TO FACILITATE APPROVED ACTIVITIES WITHIN THE ROOT PROTECTION ZONE.

7. ANY REMOVAL OF PAVING OR STRUCTURES (I.E. DEMOLITION) THAT OCCURS WITHIN THE DRIPLINE OF A PROTECTED TREE SHALL BE DONE UNDER THE DIRECT SUPERVISION OF THE PROJECT ARBORIST. TO THE MAXIMUM EXTENT FEASIBLE, DEMOLITION WORK WITHIN THE DRIPLINE PROTECTION AREA OF THE PROTECTED TREE SHALL BE PERFORMED BY HAND. IF THE PROJECT ARBORIST DETERMINES THAT IT IS NOT FEASIBLE TO PERFORM SOME PORTION(S) OF THIS WORK BY HAND, THEN THE SMALLEST/LIGHTEST WEIGHT EQUIPMENT THAT WILL ADEQUATELY PERFORM THE DEMOLITION WORK SHALL BE USED.

8. NO SIGNS, ROPES, CABLES (EXCEPT THOSE WHICH MAY BE INSTALLED BY AN ISA CERTIFIED ARBORIST TO PROVIDE LIMB SUPPORT) OR ANY OTHER ITEMS SHALL BE ATTACHED TO THE PROTECTED TREES. SMALL METALLIC NUMBERING TAGS FOR THE PURPOSE OF IDENTIFICATION IN PREPARING TREE REPORTS AND INVENTORIES SHALL BE ALLOWED.

9. NO VEHICLES, CONSTRUCTION EQUIPMENT, MOBILE HOMES/OFFICE, SUPPLIES, MATERIALS OR FACILITIES SHALL BE DRIVEN, PARKED, STOCKPILED OR LOCATED WITHIN THE DRIPLINES OF PROTECTED TREES.

10. DRAINAGE PATTERNS ON THE SITE SHALL NOT BE MODIFIED SO THAT WATER COLLECTS, STANDS OR IS DIVERTED ACROSS THE DRIPLINE OF ANY PROTECTED TREE.

11. NO TRENCHING SHALL BE ALLOWED WITHIN THE DRIPLINES OF PROTECTED TREES, EXCEPT AS SPECIFICALLY APPROVED BY THE PLANNING DEPARTMENT AS SET FORTH IN THE PROJECT'S CONDITIONS OF APPROVAL AND/OR APPROVED TREE PERMIT. IF IT IS ABSOLUTELY NECESSARY TO INSTALL UNDERGROUND UTILITIES WITHIN THE DRIPLINE OF A PROTECTED TREE THE UTILITY LINE WITHIN THE PROTECTED ZONE SHALL BE "BORED AND JACKED" OR PERFORMED UTILIZING HAND TOOLS TO AVOID ROOT INJURY UNDER THE DIRECT SUPERVISION OF THE PROJECT ARBORIST.

12. GRADING WITHIN THE PROTECTED ZONE OF A PROTECTED TREE SHALL BE MINIMIZED. CUTS WITHIN THE PROTECTED ZONE SHALL BE MAINTAINED AT LESS THAN 20% OF THE CRITICAL ROOT ZONE AREA. GRADE CUTS SHALL BE MONITORED BY THE PROJECT ARBORIST. ANY DAMAGED ROOTS ENCOUNTERED SHALL BE ROOT PRUNED AND PROPERLY TREATED AS DEEMED NECESSARY BY THE PROJECT ARBORIST.

13. MINOR ROOTS LESS THAN ONE (1) INCH IN DIAMETER ENCOUNTERED DURING APPROVED EXCAVATION AND/OR GRADING ACTIVITIES MAY BE CUT, BUT DAMAGED ROOTS SHALL BE TRACED BACK AND CLEANLY CUT BEHIND ANY SPLIT, CRACKED OR DAMAGED AREA AS DEEMED NECESSARY BY THE PROJECT ARBORIST.

14. MAJOR ROOTS GREATER THAN ONE (1) INCH IN DIAMETER ENCOUNTERED DURING APPROVED EXCAVATION AND/OR GRADING ACTIVITIES MAY NOT BE CUT WITHOUT APPROVAL OF THE PROJECT ARBORIST. DEPENDING UPON THE TYPE OF IMPROVEMENT BEING PROPOSED, BRIDGING TECHNIQUES OR A NEW SITE DESIGN MAY NEED TO BE EMPLOYED TO PROTECT THE ROOTS AND THE TREE.

15. CUT FACES, WHICH WILL BE EXPOSED FOR MORE THAN 2-3 DAYS, SHALL BE COVERED WITH DENSE BURLAP FABRIC AND WATERED TO MAINTAIN SOIL MOISTURE AT LEAST ON A DAILY BASIS (OR POSSIBLY MORE FREQUENTLY DURING SUMMER MONTHS). IF ANY NATIVE GROUND SURFACE FABRIC WITHIN THE PROTECTED ZONE MUST BE REMOVED FOR ANY REASON, IT SHALL BE REPLACED WITHIN FORTY-EIGHT (48) HOURS.

16. IF FILLS EXCEED 1 FOOT IN DEPTH UP TO 20% OF THE CRITICAL ROOT ZONE AREA, AERATION SYSTEMS MAY SERVE TO MITIGATE THE PRESENCE OF THE FILL MATERIALS AS DETERMINED BY THE PROJECT ARBORIST.

17. WHEN FILL MATERIALS ARE DEEMED NECESSARY ON TWO OR THREE SIDES OF A TREE IT IS CRITICAL TO PROVIDE FOR DRAINAGE AWAY FROM THE CRITICAL ROOT ZONE AREA OF THE TREE (PARTICULARLY WHEN CONSIDERING HEAVY WINTER RAINFALLS). OVERLAND RELEASES AND SUBTERRANEAN DRAINS DUG OUTSIDE THE CRITICAL ROOT ZONE AREA AND TIED DIRECTLY TO THE MAIN STORM DRAIN SYSTEM ARE TWO OPTIONS.

18. IN CASES WHERE A PERMIT HAS BEEN APPROVED FOR CONSTRUCTION OF A RETAINING WALL(S) WITHIN THE PROTECTED ZONE OF A PROTECTED TREE THE APPLICANT WILL BE REQUIRED TO PROVIDE FOR IMMEDIATE PROTECTION OF EXPOSED ROOTS FROM MOISTURE LOSS DURING THE TIME PRIOR TO COMPLETION OF THE WALL. THE RETAINING WALL WITHIN THE PROTECTED ZONE OF THE PROTECTED TREE SHALL BE CONSTRUCTED WITHIN SEVENTY-TWO (72) HOURS AFTER COMPLETION OF GRADING WITHIN THE ROOT PROTECTION ZONE.

19. THE CONSTRUCTION OF IMPERVIOUS SURFACES WITHIN THE DRIPLINE OF A PROTECTED TREE SHALL BE MINIMIZED. WHEN NECESSARY, A PIPED AERATION SYSTEM SHALL BE INSTALLED UNDER THE DIRECT SUPERVISION OF THE PROJECT ARBORIST.

20. PRESERVATION DEVICES SUCH AS AERATION SYSTEMS, TREE WELLS, DRAINS, SPECIAL PAVING AND CABLING SYSTEMS MUST BE INSTALLED IN CONFORMANCE WITH APPROVED PLANS AND CERTIFIED BY THE PROJECT ARBORIST.

21. NO SPRINKLER OR IRRIGATION SYSTEM SHALL BE INSTALLED IN SUCH A MANNER THAT SPRAYS WATER OR REQUIRES TRENCHING WITHIN THE DRIPLINE OF A PROTECTED TREE. AN ABOVE GROUND DRIP IRRIGATION SYSTEM IS RECOMMENDED. AN INDEPENDENT LOW-FLOW DRIP IRRIGATION SYSTEM MAY BE USED FOR ESTABLISHING DROUGHT-TOLERANT PLANTS WITHIN THE PROTECTED ZONE OF A PROTECTED TREE. IRRIGATION SHALL BE GRADUALLY REDUCED AND DISCONTINUED AFTER A TWO (2) YEAR PERIOD.

22. ALL PORTIONS OF PERMANENT FENCING THAT WILL ENCROACH INTO THE PROTECTED ZONE OF A PROTECTED TREE SHALL BE CONSTRUCTED USING POSTS SET NO CLOSER THAN TEN (10) FEET ON CENTER. POSTS SHALL BE SPACED IN SUCH A MANNER AS TO MAXIMIZE THE SEPARATION BETWEEN THE TREE TRUNKS AND THE POSTS IN ORDER TO REDUCE IMPACTS TO THE TREE(S).

NO.	REVISION	DATE	BY	APPRV'D

	BY	CHECK
DESIGN	MJW	RFE
DRAWN	DCJ	RFE
QUANT.		

0 1 2 ORIGINAL SCALE IS IN INCHES

REGISTERED PROFESSIONAL ENGINEER ROBERT F. EYNCK No. C040666 Exp. 3-31-25 11/13/2023 CIVIL STATE OF CALIFORNIA

2260 Douglas Blvd, Suite 160, Roseville, CA 95661
Ph: 916-772-7800 | www.cwecorp.com

PROPERTY OWNER / DEVELOPER
NERRADSCALI CORPORATION
3960 KINGSBARNS DRIVE
ROSEVILLE, CA 95747

CONTACT: DARREN BROWN
PH: (916) 300-7962
EMAIL: DARRENBBROWN@COMCAST.NET

ON-SITE IMPROVEMENT PLANS FOR
NERRADSCALI SUBDIVISION
SACRAMENTO, CA 95838
APN: 237-0200-092

GENERAL NOTES 2

Sheet
C2.2

11/13/2023

W:\2021 Projects\21-188 905 North Ave Sac\Working CAD\ONSITE C2 NOTES.dwg Nov 13, 2023-09:24 am

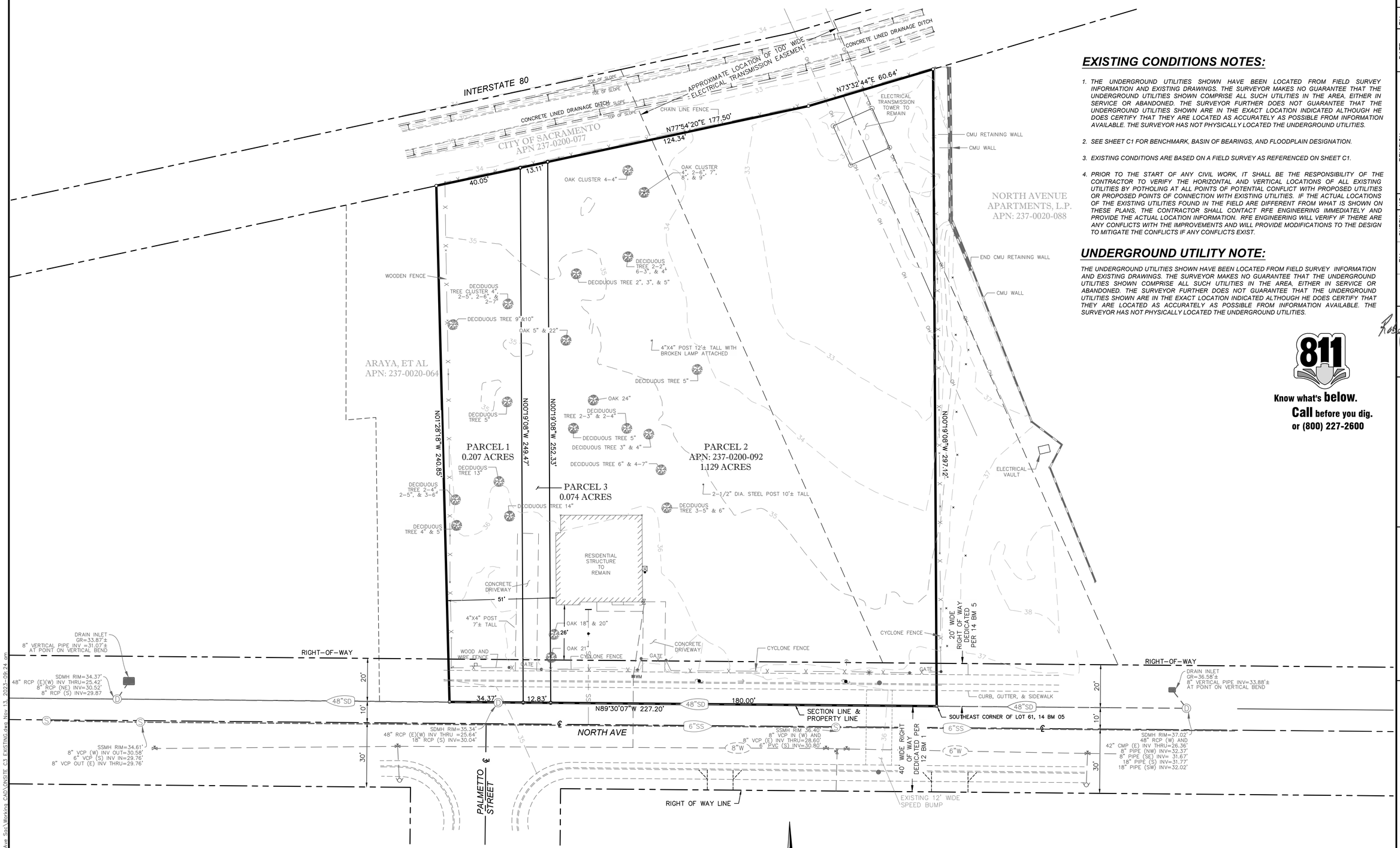

EXISTING CONDITIONS NOTES:

1. THE UNDERGROUND UTILITIES SHOWN HAVE BEEN LOCATED FROM FIELD SURVEY INFORMATION AND EXISTING DRAWINGS. THE SURVEYOR MAKES NO GUARANTEE THAT THE UNDERGROUND UTILITIES SHOWN COMPRISE ALL SUCH UTILITIES IN THE AREA, EITHER IN SERVICE OR ABANDONED. THE SURVEYOR FURTHER DOES NOT GUARANTEE THAT THE UNDERGROUND UTILITIES SHOWN ARE IN THE EXACT LOCATION INDICATED ALTHOUGH HE DOES CERTIFY THAT THEY ARE LOCATED AS ACCURATELY AS POSSIBLE FROM INFORMATION AVAILABLE. THE SURVEYOR HAS NOT PHYSICALLY LOCATED THE UNDERGROUND UTILITIES.
2. SEE SHEET C1 FOR BENCHMARK, BASIN OF BEARINGS, AND FLOODPLAIN DESIGNATION.
3. EXISTING CONDITIONS ARE BASED ON A FIELD SURVEY AS REFERENCED ON SHEET C1.
4. PRIOR TO THE START OF ANY CIVIL WORK, IT SHALL BE THE RESPONSIBILITY OF THE CONTRACTOR TO VERIFY THE HORIZONTAL AND VERTICAL LOCATIONS OF ALL EXISTING UTILITIES BY POTHOLING AT ALL POINTS OF POTENTIAL CONFLICT WITH PROPOSED UTILITIES OR PROPOSED POINTS OF CONNECTION WITH EXISTING UTILITIES. IF THE ACTUAL LOCATIONS OF THE EXISTING UTILITIES FOUND IN THE FIELD ARE DIFFERENT FROM WHAT IS SHOWN ON THESE PLANS, THE CONTRACTOR SHALL CONTACT RFE ENGINEERING IMMEDIATELY AND PROVIDE THE ACTUAL LOCATION INFORMATION. RFE ENGINEERING WILL VERIFY IF THERE ARE ANY CONFLICTS WITH THE IMPROVEMENTS AND WILL PROVIDE MODIFICATIONS TO THE DESIGN TO MITIGATE THE CONFLICTS IF ANY CONFLICTS EXIST.

UNDERGROUND UTILITY NOTE:

THE UNDERGROUND UTILITIES SHOWN HAVE BEEN LOCATED FROM FIELD SURVEY INFORMATION AND EXISTING DRAWINGS. THE SURVEYOR MAKES NO GUARANTEE THAT THE UNDERGROUND UTILITIES SHOWN COMPRISE ALL SUCH UTILITIES IN THE AREA, EITHER IN SERVICE OR ABANDONED. THE SURVEYOR FURTHER DOES NOT GUARANTEE THAT THE UNDERGROUND UTILITIES SHOWN ARE IN THE EXACT LOCATION INDICATED ALTHOUGH HE DOES CERTIFY THAT THEY ARE LOCATED AS ACCURATELY AS POSSIBLE FROM INFORMATION AVAILABLE. THE SURVEYOR HAS NOT PHYSICALLY LOCATED THE UNDERGROUND UTILITIES.

811
Know what's **below.**
Call before you dig.
or (800) 227-2600

REGISTERED PROFESSIONAL ENGINEER
No. C040666
Exp. 3–31–25
11/13/2023
CIVIL
STATE OF CALIFORNIA

NO.	REVISION	DATE	BY	APPRV'D

	BY	CHECK
DESIGN	MJW	RFE
DRAWN	DCJ	RFE
QUANT.		

ORIGINAL SCALE IS IN INCHES 0 1 2

CWE
2260 Douglas Blvd, Suite 160, Roseville, CA 95661
Ph: 916-772-1900 | www.cwecorp.com

PROPERTY OWNER / DEVELOPER
NERRADSCALI CORPORATION
3960 KINGSBARNS DRIVE
ROSEVILLE, CA 95747

CONTACT: DARREN BROWN
PH: (916) 300-7962
EMAIL: DARRENBBROWN@COMCAST.NET

ON-SITE IMPROVEMENT PLANS FOR
NERRADSCALI SUBDIVISION
SACRAMENTO, CA 95838
APN: 237-0200-092

EXISTING CONDITIONS

Sheet
C3

11/13/2023

CWE PROJECT NO. 21–188 – 905 NORTH AVENUE, SACRAMENTO, CA 95838

W:\2021 Projects\21-188 905 North Ave Sac\Working CAD\ONSITE C3 EXISTING.dwg Nov 13, 2023-09:24 am

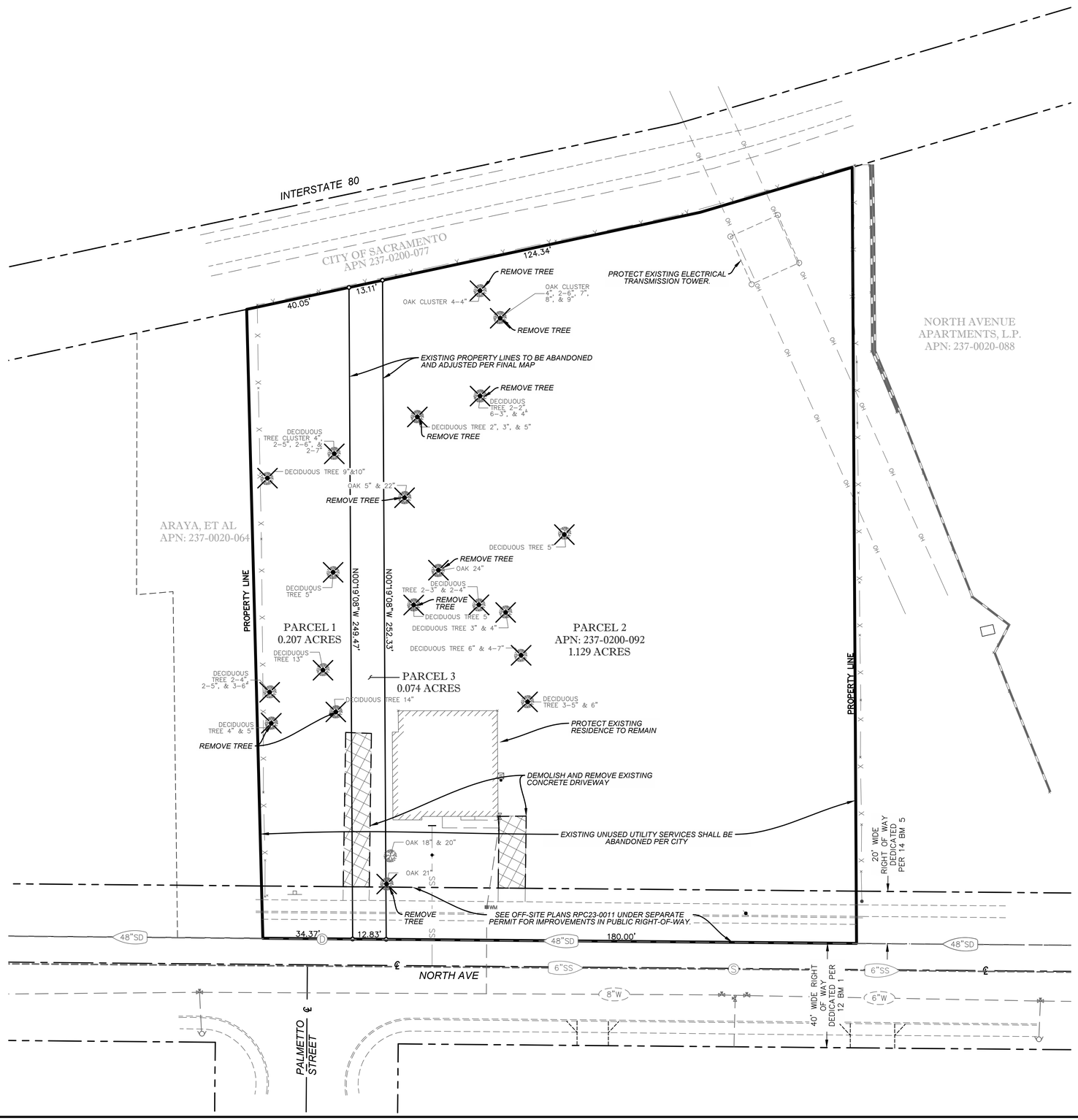

DEMOLITION LEGEND:

DEMOLISH AND REMOVE

TREE TO BE REMOVED

DEMOLITION PLAN NOTES:

1. SAWCUT AND REMOVE EXISTING ASPHALT PAVEMENT AND PORTLAND CEMENT CONCRETE SIDEWALKS AND CURB AND GUTTERS WITHIN THE LIMITS OF DEMOLITION. ENGINEER SHALL VERIFY LIMITS OF DEMOLITION. PROTECT EXISTING PAVEMENTS AND IMPROVEMENTS TO REMAIN.
2. THE DISPOSAL OF ALL DEBRIS IS THE RESPONSIBILITY OF THE CONTRACTOR AND IT SHALL BE DISPOSED OF OFF-SITE IN ACCORDANCE WITH ALL APPLICABLE CITY, COUNTY, STATE AND FEDERAL REGULATIONS. ANY PERMITS REQUIRED FOR SUCH DISPOSAL ARE THE RESPONSIBILITY OF THE CONTRACTOR.
3. SAWCUT ASPHALT 2' MIN FROM (E) CURB, (P) CURB OR AS OTHERWISE SHOWN ON PLANS.
4. REMOVE EXISTING VEGETATION, MULCH, IRRIGATION, AND OTHER AS REQUIRED IN AREA OF PROJECT IMPROVEMENTS. CAP AND RELOCATE IRRIGATION AS NEEDED. SEE LANDSCAPE PLANS.
5. EXISTING FACILITIES (e.g. IRRIGATION, ELECTRICAL) TO REMAIN SHALL BE PROTECTED DURING CONSTRUCTION. SEE APPLICABLE LANDSCAPE, ELECTRICAL AND ARCHITECTURAL PLANS.
6. REMOVE EXISTING PCC TO LIMITS SHOWN. SAWCUT AT EXISTING SCORE AND/OR EXPANSION JOINTS WHEN POSSIBLE.
7. ANY WORK IN THE CITY ROW SHALL REQUIRE A TRAFFIC CONTROL PLAN PRIOR TO THE ISSUANCE OF ANY PERMIT.
8. ANY PAVEMENT CUT AND REPAIR WITHIN THE CITY ROW SHALL BE REPAIRED PER CITY OF SACRAMENTO STANDARDS.
9. THE CONTRACTOR SHALL COMPLY WITH PROVISIONS OF THE SAFETY AND HEALTH REGULATION FOR CONSTRUCTION, PROMULGATED BY THE SECRETARY OF LABOR UNDER SECTION 107 OF THE CONTRACT WORK HOURS AND SAFETY STANDARDS ACT (40 USC 327 ET SEQ.) AS SET FORTH IN TITLE 29, C.F.R., CAL/OSHA, AND THE REGULATIONS ISSUED THEREUNDER. COMPLIANCE SHALL BE THE CONTRACTOR'S SOLE RESPONSIBILITY.
10. THE CONTRACTOR SHALL COMPLY WITH CURRENT CALIFORNIA FIRE CODE (CFC), CALIFORNIA CODE OF REGULATIONS, (CCR) TITLE 24, PART9, ARTICLE 87 - FIRE SAFETY DURING CONSTRUCTION ALTERATION OR DEMOLITION OF A BUILDING, SECTION 8706 - FIRE SAFETY DURING DEMOLITION.
11. THE CONTRACTOR SHALL PROVIDE 72 HOUR NOTICE TO THE OWNER AND ANY AFFECTED UTILITY COMPANIES PRIOR TO COMMENCEMENT OF ANY DEMOLITION ACTIVITIES.
12. EXISTING UTILITIES: LOCATE, IDENTIFY, DISCONNECT AND SEAL OR CAP OFF INDICATED UTILITIES TO BE DEMOLISHED. EXISTING UNUSED SERVICES SHALL BE ABANDONED.
13. PROTECT EXISTING LANDSCAPING MATERIALS, APPURTENANCES, AND STRUCTURES WHICH ARE NOT TO BE DEMOLISHED. PROVIDE TEMPORARY IRRIGATION WHEN IRRIGATION SUPPLY TO BE DISRUPTED.
14. CONTRACTOR SHALL BE RESPONSIBLE FOR PREVENTING MOVEMENT OR SETTLEMENT OF ADJACENT STRUCTURES, AND PROTECTION OF ADJACENT UNDERGROUND UTILITIES. CONTRACTOR SHALL PROVIDE BRACING AND SHORING WHEN REQUIRED.
15. EXISTING UTILITIES TO BE REMOVED: DEMOLISH AND REMOVE EXISTING BELOW GRADE UTILITIES UNLESS OTHERWISE NOTED.
16. REMOVE MATERIALS TO BE RE-INSTALLED OR RETAINED IN MANNER TO PREVENT DAMAGE. STORE AND PROTECT.
17. BACKFILL OPEN PITS AND HOLES CAUSED AS A RESULT OF DEMOLITION WITH EXCESS SOIL ON SITE PER RECOMMENDATIONS CONTAINED IN THE SOILS REPORT FOR BACKFILL MATERIAL.
18. UNIFORMLY ROUGH GRADE AND COMPACT AREAS AFFECTED BY DEMOLITION TO MAINTAIN SITE GRADES AND CONTOURS.
19. CONTRACTOR SHALL BE RESPONSIBLE FOR SECURITY OF CONSTRUCTION AREA AND PROTECTION OF PUBLIC SAFETY DURING ALL TIMES DURING DEMOLITION WORK.
20. HAZARDOUS MATERIALS:
    A. THE CONTRACTOR SHALL COMPLY WITH ALL REQUIREMENTS, PROCEDURES, AND ABATEMENT SPECIFICATIONS FOR THE SAFE REMOVAL OF HAZARDOUS WASTE MATERIALS.
    B. IF MATERIALS SUSPECTED OF CONTAINING HAZARDOUS MATERIALS ARE ENCOUNTERED, DO NOT DISTURB. NOTIFY ENGINEER & ARCHITECT.
    C. CONFORM TO APPLICABLE REGULATORY PROCEDURES WHEN DISCOVERING HAZARDOUS OR CONTAMINATED MATERIALS.
21. PROTECT (E) IRRIGATION AND MAINTAIN TO ALL LANDSCAPE AREAS NOT DISTURBED BY THE PROJECT DURING CONSTRUCTION.
22. CONTRACTOR SHALL BE RESPONSIBLE FOR COORDINATING WITH APPLICABLE DRY UTILITY AGENCIES FOR ABANDONMENT OR REMOVAL OF EXISTING SERVICES PRIOR TO COMMENCEMENT OF SITE DEMOLITION. THE OWNER AND ENGINEER WILL NOT BE HELD RESPONSIBLE FOR ANY DAMAGES OR CLAIMS RESULTING FROM FAILURE TO PROPERLY COORDINATE WITH DRY UTILITY AGENCIES.
23. CONTRACTOR SHALL IMPLEMENT CITY OF SACRAMENTO TREE PRESERVATION REQUIREMENTS, SEE NOTES ON SHEET C2.2.
24. INSTALL 20'X10' CHAIN LINK FENCING AROUND EXISTING TREES TO REMAIN PRIOR TO DEMOLITION. COMPLY WITH TREE PROTECTION MEASURES IN GENERAL NOTES. SEE SHEET C2.2.
25. EXISTING IMPROVEMENTS THAT ARE DETERMINED DETERIORATED BY THE PUBLIC WORKS INSPECTOR DURING CONSTRUCTION OR AT FINAL WALK THRU INSPECTION SHALL BE RECONSTRUCTED TO THE SATISFACTION OF PUBLIC WORKS. CONSTRUCTION SHALL BE COMPLETED PRIOR TO THE ISSUANCE OF NOTICE OF COMPLETION (NOC). ALL COSTS ASSOCIATED WITH THIS RECONSTRUCTION SHALL BE THE RESPONSIBILITY OF THE PROPERTY OWNER AND/OR CONTRACTOR.

20 0 20 40
1 INCH = 20 FEET

811 Know what's below. Call before you dig. or (800) 227-2600

NO.	REVISION	DATE	BY	APPRV'D

BY	CHECK
DESIGN MJW	RFE
DRAWN DCJ	RFE
QUANT.	

0 1 2 ORIGINAL SCALE IS IN INCHES

REGISTERED PROFESSIONAL ENGINEER RICHARD F. ENGLE No. C040666 Exp. 3-31-25 CIVIL STATE OF CALIFORNIA
11/13/2023

CWE
2260 Douglas Blvd, Suite 160, Roseville, CA 95661
Ph: 916-772-7800 | www.cwecorp.com

PROPERTY OWNER / DEVELOPER
NERRADSCALI CORPORATION
3960 KINGSBARNS DRIVE
ROSEVILLE, CA 95747
CONTACT: DARREN BROWN
PH: (916) 300-7962
EMAIL: DARRENBBROWN@COMCAST.NET

ON-SITE IMPROVEMENT PLANS FOR
NERRADSCALI SUBDIVISION
SACRAMENTO, CA 95838
APN: 237-0200-092

DEMOLITION PLAN

Sheet
C4

11/13/2023

CWE PROJECT NO. 21-188 – 905 NORTH AVENUE, SACRAMENTO, CA 95838

W:\2021 Projects\21-188 905 North Ave Sac\Working CAD\ONSITE C4 DEMO.dwg Nov 13, 2023-09:25 am

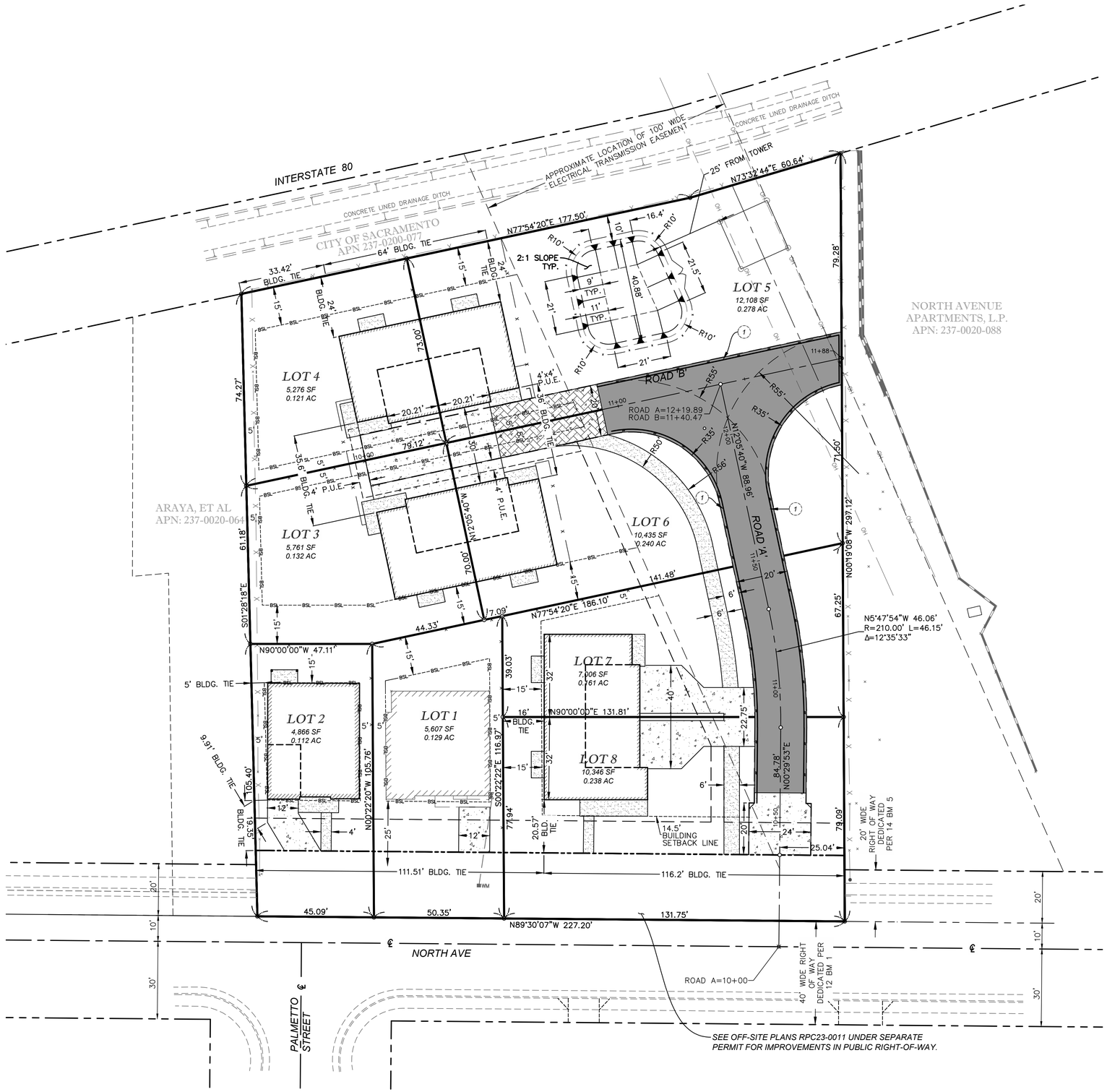

NOTES:

DIMENSIONS ARE TO BOTTOM FACE OF CURB UNLESS SPECIFIED OTHERWISE. BUILDING OUTLINE REPRESENT THE OUTER-MOST ELEMENT OF BUILDINGS. CONTRACTOR SHALL REFER TO FOUNDATION PLANS FOR CONSTRUCTION OF FOUNDATION AND BUILDING SLAB.

UNDERGROUND UTILITY NOTE:

THE UNDERGROUND UTILITIES SHOWN HAVE BEEN LOCATED FROM FIELD SURVEY INFORMATION AND EXISTING DRAWINGS. THE SURVEYOR MAKES NO GUARANTEE THAT THE UNDERGROUND UTILITIES SHOWN COMPRISE ALL SUCH UTILITIES IN THE AREA, EITHER IN SERVICE OR ABANDONED. THE SURVEYOR FURTHER DOES NOT GUARANTEE THAT THE UNDERGROUND UTILITIES SHOWN ARE IN THE EXACT LOCATION INDICATED ALTHOUGH HE DOES CERTIFY THAT THEY ARE LOCATED AS ACCURATELY AS POSSIBLE FROM INFORMATION AVAILABLE. THE SURVEYOR HAS NOT PHYSICALLY LOCATED THE UNDERGROUND UTILITIES.

NOTICE TO CONTRACTOR - ORDER OF WORK:

PRIOR TO THE START OF ANY CIVIL WORK, IT SHALL BE THE RESPONSIBILITY OF THE CONTRACTOR TO VERIFY THE HORIZONTAL AND VERTICAL LOCATIONS OF ALL EXISTING UTILITIES BY POTHOLING AT ALL POINTS OF POTENTIAL CONFLICT WITH PROPOSED UTILITIES OR PROPOSED POINTS OF CONNECTION WITH EXISTING UTILITIES. IF THE ACTUAL LOCATIONS OF THE EXISTING UTILITIES FOUND IN THE FIELD ARE DIFFERENT FROM WHAT IS SHOWN ON THESE PLANS, THE CONTRACTOR SHALL CONTACT RFE ENGINEERING IMMEDIATELY AND PROVIDE THE ACTUAL LOCATION INFORMATION. RFE ENGINEERING WILL VERIFY IF THERE ARE ANY CONFLICTS WITH THE IMPROVEMENTS AND WILL PROVIDE MODIFICATIONS TO THE DESIGN TO MITIGATE THE CONFLICTS IF ANY CONFLICTS EXIST.

LEGEND:

BUILDING SETBACK ——BSL——BSL——BSL——

FIRE LANE STRIPING ————————

FIRE STRIPING KEY NOTE:

1. FIRE LANE DESIGNATION STRIPE AS DELINEATED ON THE DRAWINGS. CURBS SHALL BE PAINTED RED MARKED BY WHITE LETTERING "FIRE LANE - NO PARKING" A MINIMUM OF THREE INCHES TALL WITH A ½ INCH WIDE MINIMUM STROKE. THE INTERVAL BETWEEN STENCILED LETTERING SHALL BE ADEQUATE TO INFORM THE PUBLIC OF THE EXISTENCE OF THE FIRE LANE BUT IN NO EVENT SHALL THE INTERVAL EXCEED 50 FEET.

NO.	REVISION	DATE	BY	APPRV'D

	BY	CHECK
DESIGN	MJW	RFE
DRAWN	DCJ	RFE
QUANT.		

ORIGINAL SCALE IS IN INCHES 0 1 2

REGISTERED PROFESSIONAL ENGINEER ROBERT F. ECK No. C040666 Exp. 3-31-25 CIVIL STATE OF CALIFORNIA
11/13/2023

CWE
2260 Douglas Blvd, Suite 160, Roseville, CA 95661
Ph: 916-772-7800 | www.cwecorp.com

PROPERTY OWNER / DEVELOPER
NERRADSCALI CORPORATION
3960 KINGSBARNS DRIVE
ROSEVILLE, CA 95747

CONTACT: DARREN BROWN
PH: (916) 300-7952
EMAIL: DARRENBBROWN@COMCAST.NET

ON-SITE IMPROVEMENT PLANS FOR
NERRADSCALI SUBDIVISION
SACRAMENTO, CA 95838
APN: 237-0200-092

HORIZONTAL CONTROL PLAN

Sheet
C5

11/13/2023

20 0 20 40
1 INCH = 20 FEET

811 Know what's **below.** **Call** before you dig. or (800) 227-2600

CWE PROJECT NO. 21-188 – 905 NORTH AVENUE, SACRAMENTO, CA 95838

W:\2021 Projects\21-188 905 North Ave Sac\Working CAD\ONSITE C5 HORIZONTAL CNTL.dwg Nov 13, 2023-09:25 am

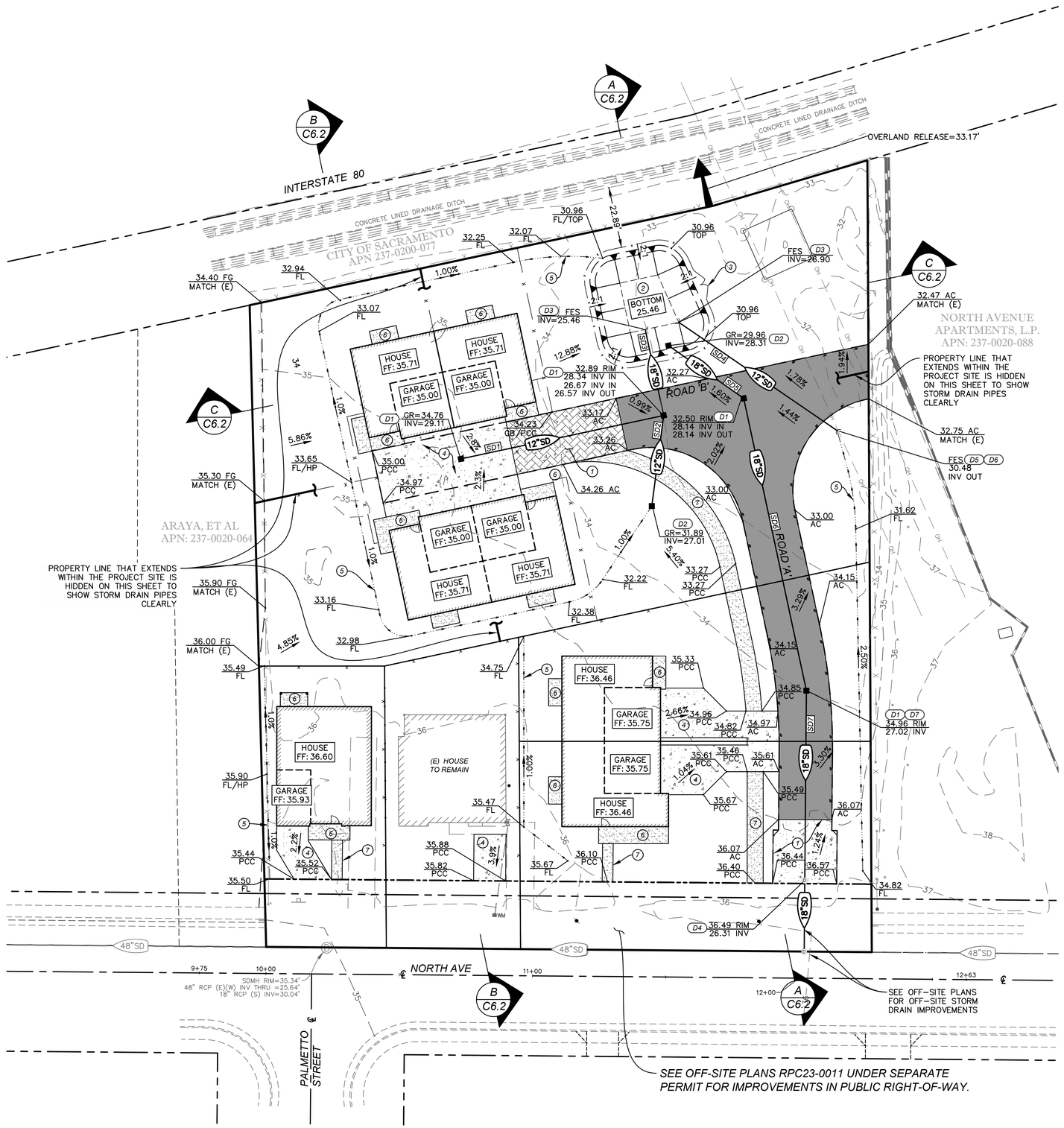

LEGEND:

- OVERLAND RELEASE
- DRAINAGE FLOW DIRECTION
- GATE AND FENCING - SEE ARCHITECTURAL PLANS — X —
- AC DRIVE AISLE (TI=6.0) 4" HMA / 12" CL 2 AB
- HEAVY DUTY PCC (4,000 PSI) 6" PCC / 7" CL 2 AB NO. 4 REBAR @ 12" OCEW
- PEDESTRIAN PCC (4,000 PSI) 4" PCC / 6" CL 2 AB NO.4 REBAR @ 18" OCEW
- LANDSCAPING SEE LANDSCAPE PLANS

GRADING CONSTRUCTION KEYNOTES:

1. CONSTRUCT 6" STAMPED CONCRETE DRIVEWAY. SEE ARCHITECTURAL AND LANDSCAPE PLANS FOR PATTERN DETAILS.
2. CONSTRUCT STORMWATER DETENTION / SEDIMENT POND.
3. PLACE 6' HIGH SECURITY FENCE AROUND PERIMETER OF DETENTION BASIN WITH ACCESS GATE. SEE ARCHITECTURAL PLANS FOR DETAILS.
4. CONSTRUCT CONCRETE DRIVEWAY.
5. CONSTRUCT VEGETATED DRAINAGE SWALE AT A MIN. 1.0% SLOPE. SEE DETAIL 3, SHEET C10.2 FOR SWALE DETAILS.
6. CONSTRUCT CONCRETE PATIOS, PORCH. WITH 4" PCC / 6" CLASS 2 AB. CONCRETE TO BE 4" BELOW HOUSE ELEVATION AT DOOR THRESHOLD AND 4" ABOVE ADJACENT FINISHED GRADE. CONTRACTOR TO SLOPE CONCRETE A MAXIMUM 2% AWAY FROM HOUSE.
7. CONSTRUCT ON-SITE CONCRETE PEDESTRIAN SIDEWALK PER DETAIL 1, SHEET C10.2.

STORMDRAIN CONSTRUCTION KEYNOTES:

- D1 INSTALL DRAIN INLET TYPE 1 OR APPROVED EQUAL (EXCLUDING LANDSCAPE AND DRAINAGE INLET) PER DETAIL 5, SEE SHEET C10.2.
- D2 INSTALL 24" NYLOPLAST DRAIN BASIN WITH DOME GRATE (OR APPROVED EQUIVALENT).
- D3 INSTALL FLARED END SECTION WITH FLAP GATE AND ROCK SLOPE PROTECTION PER DETAIL 7, SEE SHEET C10.2. - REF. CASQA BMP EC-10.
- D4 INSTALL STORM DRAIN MANHOLE PER SACRAMENTO CITY STANDARD DWG. NO. S-80, REFERENCED ON SHEET C10.2.
- D5 CONSTRUCT DITCH BOX PER SACRAMENTO CITY STANDARD DETAIL S-30, REFERENCED ON SHEET C10.2.
- D6 INSTALL FLARED END SECTION WITH ROCK SLOPE PROTECTION PER DETAIL 7, SEE SHEET C10.2. - REF. CASQA BMP EC-10.
- D7 INSTALL 2" ORIFICE AT OUTLET STRUCTURE PER DETAIL 4, SHEET C10.3.

NOTES:

1. ALL VALVES, MANHOLES, CLEANOUTS, DI'S, ETC. WITHIN LIMITS OF CONSTRUCTION TO BE ADJUSTED TO FINISH GRADE AS NEEDED.
2. SEE PAVEMENT SECTIONS ON REFERENCED ON LEGENDS.
3. GRADING AND PAVING SHALL BE IN ACCORDANCE WITH PROJECT GEOTECHNICAL REPORT.
4. VERIFY ALL UTILITY LOCATIONS PRIOR TO CONSTRUCTION.
5. SEE SHEET C1 FOR APPROXIMATE EARTHWORK SUMMARY.
6. SEE SHEET C2 FOR CITY MANDATORY GRADING NOTES.
7. ALL 6", 8", AND 12" PIPING SHOWN HEREON LEADING TO LANDSCAPE DRAINS AND ROOF LEADERS SHALL BE INSTALLED AT MINIMUM SLOPES OF 1.0%, 0.50%, AND 0.35%, RESPECTIVELY.
8. STRUCTURAL SECTIONS ASSUME LIME TREATED SUBGRADE PER GEOTECHNICAL REPORT. REFERENCE GEOTECHNICAL REPORT LIME TREATMENT RECOMMENDATIONS.
9. PRIOR TO PLACEMENT OF PAVING/CONCRETE, UPPER 8" OF LIME TREATED SUBGRADE SOILS SHALL BE COMPACTED TO 95% RC AT OPTIMUM MOISTURE CONTENT.
10. COMPACT ALL AGGREGATE BASE TO 95% RC.
11. ALL PAVING/CONCRETE SHALL BE PER THE GEOTECHNICAL REPORT REFERENCED ON SHEET C1.

STORM DRAIN PIPE TABLE

PIPE #	SIZE	LENGTH	MATERIAL	BEARING	SLOPE
SD1	12"	78 LF	SDR-35 PVC	N77°54'20"E	1.00%
SD2	12"	34 LF	SDR-35 PVC	N07°26'29"E	1.00%
SD3	18"	33 LF	SDR-35 PVC	N12°05'41"W	3.36%
SD4	12"	72 LF	SDR-35 PVC	N55°37'39"W	4.98%
SD5	18"	34 LF	SDR-35 PVC	S54°58'45"E	0.50%
SD6	18"	112 LF	SDR-35 PVC	S12°05'35"E	1.00%
SD7	18"	71 LF	SDR-35 PVC	S00°28'12"W	1.00%

1 INCH = 20 FEET

811 Know what's below. Call before you dig. or (800) 227-2600

CA LICENSED CIVIL ENGINEER OR LAND SURVEYOR SHALL PREPARE AND SUBMIT A GRADING CERTIFICATION LETTER TO THE CITY BUILDING INSPECTOR CERTIFYING THE PAD ELEVATIONS PRIOR TO FOOTING INSPECTION AND CERTIFYING FINAL GRADING PRIOR TO THE PROJECT'S FINAL INSPECTION.

"I HAVE COMPLIED WITH THE CRITERIA OF SACRAMENTO CITY CODE CHAPTER 15.92 AND APPLIED THEM ACCORDING FOR THE EFFICIENT USE OF WATER IN THE GRADING DESIGN PLAN."

ROBERT F. EYNCK, P.E. C040666 DATE

NO.	REVISION	DATE	BY	APPRV'D

BY	CHECK
DESIGN MJW	RFE
DRAWN DCJ	RFE
QUANT.	

ORIGINAL SCALE IS IN INCHES 0 1 2

REGISTERED PROFESSIONAL ENGINEER ROBERT F. EYNCK No. C040666 Exp. 3-31-25 CIVIL STATE OF CALIFORNIA

11/29/2023

CWE
2260 Douglas Blvd, Suite 160, Roseville, CA 95661
Ph: 916-772-7800 | www.cwecorp.com

PROPERTY OWNER / DEVELOPER
NERRADSCALI CORPORATION
3960 KINGSBARNS DRIVE
ROSEVILLE, CA 95747
CONTACT: DARREN BROWN
PH: (916) 300-7962
EMAIL: DARRENBBROWN@COMCAST.NET

ON-SITE IMPROVEMENT PLANS FOR
NERRADSCALI SUBDIVISION
SACRAMENTO, CA 95838
APN: 237-0200-092

GRADING, DRAINAGE AND PAVING PLAN

Sheet **C6.1**

11/13/2023

CWE PROJECT NO. 21-188 – 905 NORTH AVENUE, SACRAMENTO, CA 95838

W:\2021 Projects\21-188 905 North Ave Soc\Working CAD\ONSITE C6 GRADING PLAN.dwg Nov 29, 2023-03:06 pm

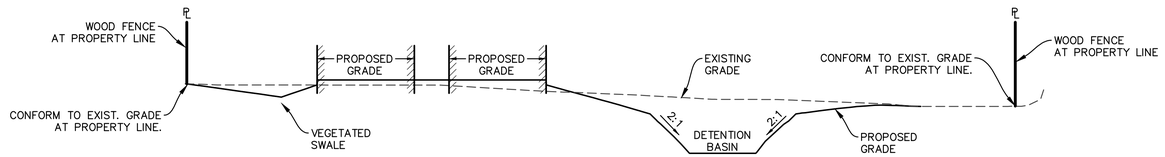

C
-

SECTION C

SCALE: 1" = 20'

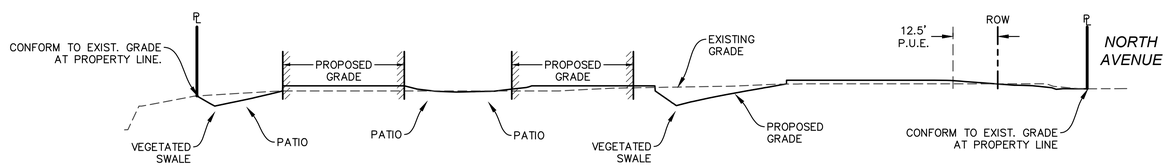

B
-

SECTION B

SCALE: 1" = 20'

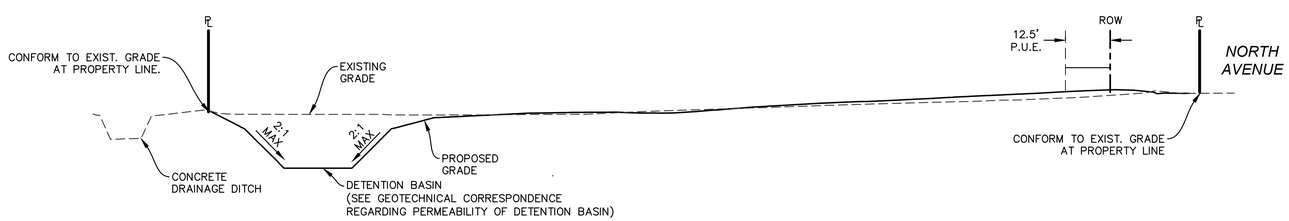

A
-

SECTION A

SCALE: 1" = 20'

NOTE:
SEE FINAL MAP FOR RECIPROCAL DRAINAGE EASEMENTS BETWEEN LOTS

811
Know what's **below.**
Call before you dig.
or (800) 227-2600

NO.	REVISION	DATE	BY	APPR'D

BY		CHECK
DESIGN	MJW	RFE
DRAWN	DCJ	RFE
QUANT.		

0 1 2
ORIGINAL SCALE IS IN INCHES

REGISTERED PROFESSIONAL ENGINEER
ROBERT F. ENGLE
No. C040666
Exp. 3-31-25
11/13/2023
CIVIL
STATE OF CALIFORNIA

CWE
2260 Douglas Blvd, Suite 160, Roseville, CA 95661
Ph: 916-772-7800 | www.cwecorp.com

PROPERTY OWNER / DEVELOPER
NERRADSCALI CORPORATION
3960 KINGSBARNS DRIVE
ROSEVILLE, CA 95747
CONTACT: DARREN BROWN
PH: (916) 300-7962
EMAIL: DARRENBBROWN@COMCAST.NET

ON-SITE IMPROVEMENT PLANS FOR
NERRADSCALI SUBDIVISION
SACRAMENTO, CA 95838
APN: 237-0200-092

GRADING AND DRAINAGE DETAILS

Sheet
C6.2
8 of 14
11/13/2023

CWE PROJECT NO. 21-188 – 905 NORTH AVENUE, SACRAMENTO, CA 95838

W:\2021 Projects\21-188 905 North Ave Sac\Working CAD\ONSITE C6 GRADING PLAN.dwg Nov 13, 2023-09:25 am

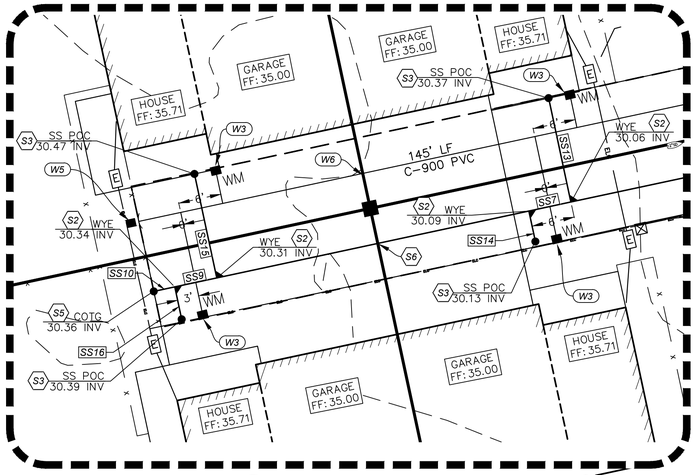

1 - DETAIL
SCALE: 1" = 10'

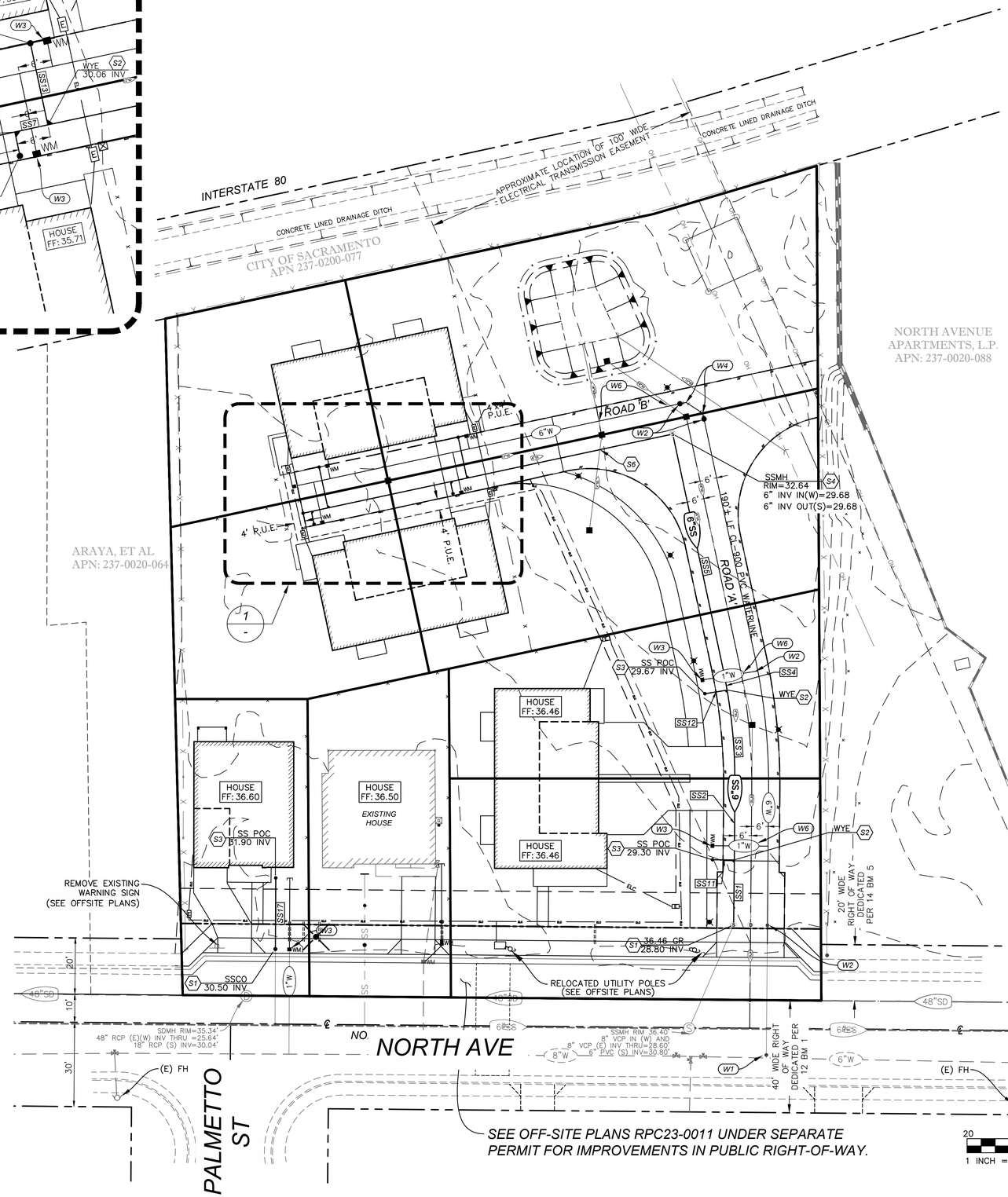

WATER CONSTRUCTION KEYNOTES:

- W1 CONNECT TO EXISTING 6" WATER STUB AT RIGHT-OF-WAY. SEE OFF-SITE PLANS UNDER SEPARATE PERMIT FOR WATER CONNECTION IN PUBLIC RIGHT-OF-WAY.
- W2 INSTALL 6" GATE VALVES PER SACRAMENTO CITY STANDARD DETAILS W-303 AND W-304, REFERENCED ON SHEET C10.1.
- W3 INSTALL 1" RESIDENTIAL WATER SERVICE WITH METER BOX, METER SETTER, AND ALL ASSOCIATED FITTING PER CITY OF SACRAMENTO STANDARD DETAILS W-402 AND W-405, REFERENCED ON SHEET C10.1. WATER METERS TO BE INSTALLED AND WATER DEVELOPMENT FEE TO BE COLLECTED WITH ON-SITE BUILDING PERMIT FOR EACH RESIDENCE. WATER SERVICES (FROM MAIN TO WATER METER) ARE TO BE 1". IF DEEMED NECESSARY, PRIVATE WATER LINE UPSTREAM OF WATER METER CAN BE INCREASE TO 1.5".
- W4 INSTALL 45 DEG BEND WITH THRUST BLOCKING PER CITY OF SACRAMENTO STANDARD DETAILS W-103, REFERENCED ON SHEET C10.1.
- W5 INSTALL 2" BLOW-OFF VALVE ASSEMBLY PER CITY OF SACRAMENTO STANDARD DETAIL W-301, REFERENCED ON SHEET C10.1.
- W6 PROVIDE A MIN. OF 12" VERTICAL SEPARATION BETWEEN CROSSING UTILITY PIPES.

SANITARY SEWER CONSTRUCTION KEYNOTES:

- S1 CONNECT TO EXISTING SANITARY SEWER 48" MANHOLE. SEE OFF-SITE PLANS FOR CONNECTION DETAILS.
- S2 PROVIDE 4" LATERAL SEWER SERVICE CONNECTION WITH LONG SWEEP WYE FITTING.
- S3 SANITARY SEWER POINT OF CONNECTION WITH 2-WAY CLEANOUT PER CITY OF SACRAMENTO STANDARD DETAIL S-260 AND S-265, REFERENCED ON SHEET C10.3. VERIFY CONNECTION WITH PLUMBING AND ARCHITECTURAL PLANS.
- S4 PLACE 48" SANITARY SEWER STANDARD MANHOLE NO.3 PER CITY OF SACRAMENTO STANDARD DETAIL S-70, REFERENCED ON SHEET C10.2.
- S5 PLACE 1-WAY CLEANOUT FLUSHING BRANCH.
- S6 PROVIDE A MIN. OF 12" VERTICAL SEPARATION BETWEEN CROSSING UTILITY PIPES.

NOTES:

1. ALL ON-SITE WATER, DRAINAGE, AND SEWER IS PRIVATE.
2. STUB UTILITIES 5' FROM BUILDING.
3. VERIFY HORIZONTAL AND VERTICAL LOCATION OF WATER AND SANITARY SEWER.
4. CONNECTIONS AT BUILDING POCS WITH PLUMBING PLANS PRIOR TO CONSTRUCTION.
5. SEE LANDSCAPE AND IRRIGATION PLANS FOR CONTINUATION OF IRRIGATION LINES.
6. SEE GRADING PLANS FOR DETAILS ON STORM DRAIN LINES.
7. THRUST BLOCKS FOR WATERLINES SHALL BE PER CITY STANDARD DRAWING W-103, SHEET C10.1.
8. 6" WATERLINES SHALL BE PVC C-900 CL 150 OR APPROVED EQUAL UNLESS OTHERWISE SHOWN.
9. BEDDING, INITIAL AND TRENCH BACKFILL FOR WATER SHALL BE CONSTRUCTED PER CITY STANDARD SD-16 AND THE CITY SPECIFICATIONS.
10. PIPE BEDDING FOR SANITARY SEWER SHALL BE PER COUNTY STD. DWG. 7-4, SHEET C10.3.
11. STREET LIGHTS SHOWN FOR REFERENCE ONLY. VERIFY LOCATIONS WITH SITE LIGHTING PLANS.

STREET LIGHT NOTE:

1. ALL ON-SITE STREET LIGHTS INCLUDING POWER WILL BE PRIVATE.

SANITARY SEWER PIPE TABLE

PIPE #	SIZE	LENGTH	MATERIAL	SLOPE
SS1	6"	23 LF	SDR-35 PVC	0.50%
SS2	6"	26 LF	SDR-35 PVC	0.50%
SS3	6"	34 LF	SDR-35 PVC	0.50%
SS4	6"	8 LF	SDR-35 PVC	0.50%
SS5	6"	85 LF	SDR-35 PVC	0.50%
SS7	6"	6 LF	SDR-35 PVC	0.50%
SS9	6"	6 LF	SDR-35 PVC	0.50%
SS10	6"	3 LF	SDR-35 PVC	0.50%
SS11	4"	8 LF	SDR-35 PVC	5.00%
SS12	4"	8 LF	SDR-35 PVC	5.00%
SS13	4"	15 LF	SDR-35 PVC	2.08%
SS14	4"	4 LF	SDR-35 PVC	0.84%
SS15	4"	15 LF	SDR-35 PVC	1.09%
SS16	4"	5 LF	SDR-35 PVC	1.00%
SS17	4"	25 LF	SDR-35 PVC	5.50%

NOTE: SEWER SLOPES SHALL CONFORM TO PLUMBING CODE REQUIREMENTS

NOTE:
ALL CONSTRUCTION WITHIN PUBLIC RIGHT OF WAY AND WITHIN P.U.E. SHALL HAVE ENCROACHMENT PERMIT FROM DEPT. OF TRANSPORTATION - DEV. ENGINEERING.

811 Know what's below. Call before you dig. or (800) 227-2600

DESIGN	MJW				
DRAWN	DCJ				
QUANT.					

BY	CHECK	NO.	REVISION	DATE	BY	APPRV'D
	RFE					
	RFE					

0 1 2 ORIGINAL SCALE IS IN INCHES

REGISTERED PROFESSIONAL ENGINEER RFE No. C040666 Exp. 3-31-25 CIVIL STATE OF CALIFORNIA
11/13/2023

CWE
2260 Douglas Blvd. Suite 160, Roseville, CA 95661
Ph: 916-772-1900 | www.cwecorp.com

PROPERTY OWNER / DEVELOPER
NERRADSCALI CORPORATION
3960 KINGSBARNS DRIVE
ROSEVILLE, CA 95747
CONTACT: DARREN BROWN
PH: (916) 300-7962
EMAIL: DARRENBBROWN@COMCAST.NET

ON-SITE IMPROVEMENT PLANS FOR
NERRADSCALI SUBDIVISION
SACRAMENTO, CA 95838
APN: 237-0200-092

UTILITY PLAN

Sheet C7
9 of 14
11/13/2023

CWE PROJECT NO. 21-188 – 905 NORTH AVENUE, SACRAMENTO, CA 95838

W:\2021 Projects\21-188 905 North Ave Sac\Working CAD\ONSITE C7 UTILITY.dwg Nov 13, 2023-09:25 am

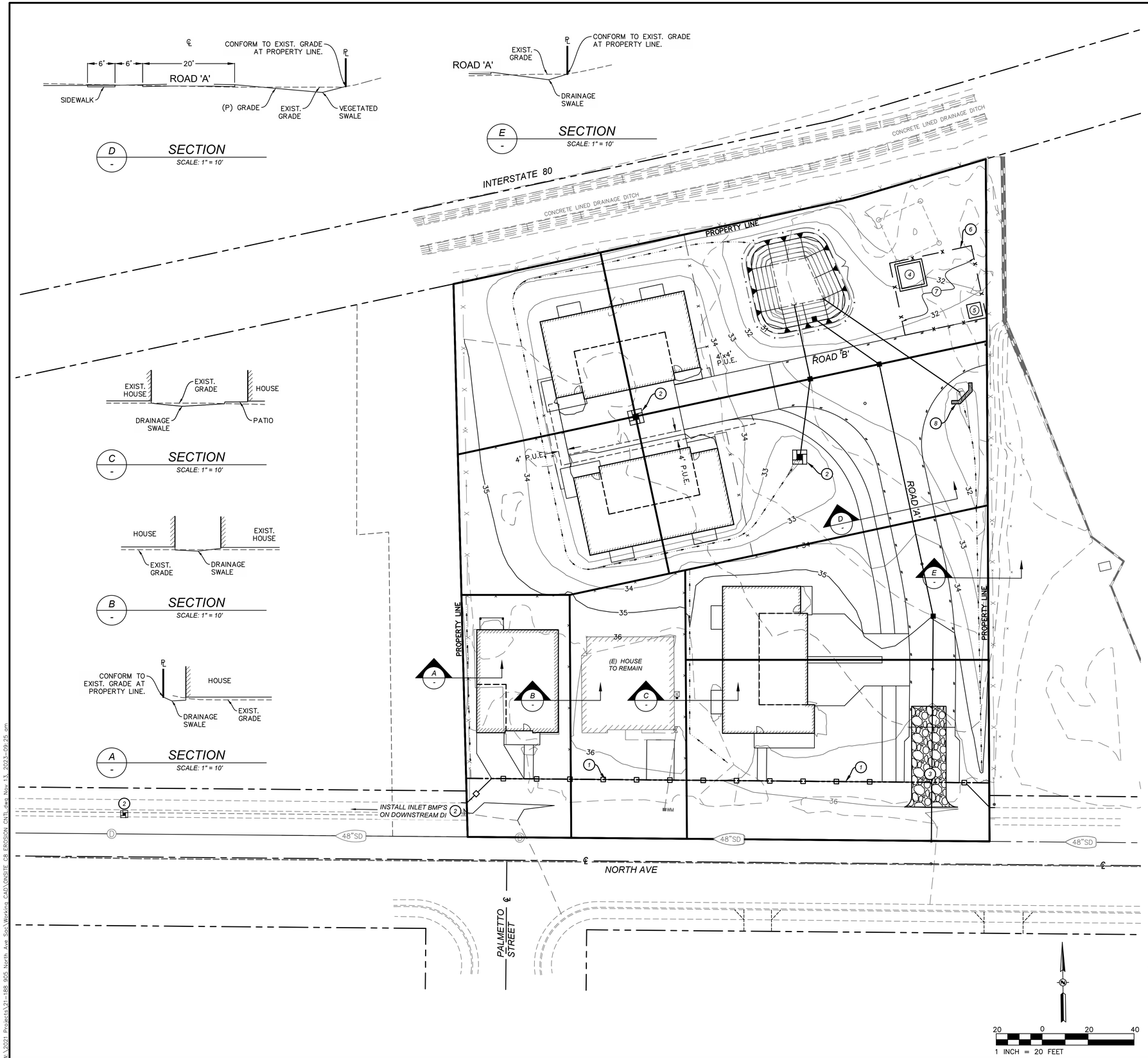

LEGEND:

FIBER ROLL

SURFACE FLOW

GRAVEL BAG AND INLET FILTER

TEMPORARY STABILIZED CONSTRUCTION ENTRANCE

OVERLAND RELEASE

CULVERT CHECK DAM

CONCRETE WASHOUT

CITY OF SACRAMENTO DEPARTMENT OF UTILITIES: EROSION AND SEDIMENT CONTROL NOTES:

1. THE CONTRACTOR SHALL FOLLOW THE GUIDELINES FOR THE CITY OF SACRAMENTO'S "ADMINISTRATIVE AND TECHNICAL PROCEDURES MANUAL FOR GRADING AND EROSION AND SEDIMENT CONTROL" FOR THE MEASURES SHOWN OR STATED ON THESE PLANS.
2. CONTRACTOR MUST ENSURE THAT THE CONSTRUCTION SITE IS PREPARED PRIOR TO THE ONSET OF ANY STORM. CONTRACTOR SHALL HAVE ALL EROSION AND SEDIMENT CONTROL MEASURES IN PLACE FOR THE WINTER MONTHS PRIOR TO OCTOBER 1.
3. ALL EROSION AND SEDIMENT CONTROL MEASURES SHALL BE MAINTAINED UNTIL DISTURBED AREAS ARE STABILIZED. CHANGES TO THIS EROSION AND SEDIMENT CONTROL PLAN SHALL BE MADE TO MEET FIELD CONDITIONS ONLY WITH THE APPROVAL OF OR AT THE DIRECTION OF A REPRESENTATIVE OF THE DEPARTMENT OF UTILITIES.
4. THIS PLAN MAY NOT COVER ALL THE SITUATIONS THAT ARISE DURING CONSTRUCTION DUE TO UNANTICIPATED FIELD CONDITIONS. VARIATIONS MAY BE MADE TO THE PLAN IN THE FIELD SUBJECT TO THE APPROVAL OF OR AT THE DIRECTION OF A REPRESENTATIVE OF THE DEPARTMENT OF UTILITIES.
5. ALL EROSION AND SEDIMENT CONTROL MEASURES SHALL BE CHECKED BEFORE AND AFTER ALL STORMS TO ENSURE MEASURES ARE FUNCTIONING PROPERLY.
6. CONTRACTOR SHALL MAINTAIN A LOG AT THE SITE OF ALL INSPECTIONS OR MAINTENANCE OF BMPS, AS WELL AS, ANY CORRECTIVE CHANGES TO THE BMPS OR EROSION AND SEDIMENT CONTROL PLAN.
7. IN AREAS WHERE SOIL IS EXPOSED, PROMPT REPLANTING WITH NATIVE COMPATIBLE, DROUGHT-RESISTANT VEGETATION SHALL BE PERFORMED. NO AREAS WILL BE LEFT EXPOSED OVER THE WINTER SEASON.
8. THE CONTRACTOR SHALL INSTALL THE STABILIZED CONSTRUCTION ENTRANCE PRIOR TO COMMENCEMENT OF GRADING. LOCATION OF THE ENTRANCE MAY BE ADJUSTED BY THE CONTRACTOR TO FACILITATE GRADING OPERATIONS. ALL CONSTRUCTION TRAFFIC ENTERING THE PAVED ROAD MUST CROSS THE STABILIZED CONSTRUCTION ENTRANCE. THE STABILIZED CONSTRUCTION ENTRANCE SHALL REMAIN IN PLACE UNTIL THE ROAD BASE ROCK COURSE IS COMPLETED.
9. ALL SEDIMENT DEPOSITED ON PAVED ROADWAYS SHALL BE SWEPT AT THE END OF EACH WORKING DAY OR AS NECESSARY.
10. CONTRACTOR SHALL PLACE AROUND ALL NEW DRAINAGE STRUCTURE OPENINGS IMMEDIATELY AFTER THE STRUCTURE OPENING IS CONSTRUCTED. THESE SHALL BE MAINTAINED AND REMAIN IN PLACE UNTIL CONSTRUCTION IS COMPLETED.
11. CONTRACTOR SHALL IMPLEMENT HOUSEKEEPING PRACTICES AS FOLLOWS:
    - A. SOLID WASTE MANAGEMENT:
      PROVIDE DESIGNATED WASTE COLLECTION AREAS AND CONTAINERS. ARRANGE FOR REGULAR REMOVAL AND DISPOSAL. CLEAR SITE OF TRASH INCLUDING ORGANIC DEBRIS, PACKAGING MATERIALS, SCRAP OR SURPLUS BUILDING MATERIALS AND DOMESTIC WASTE DAILY.
    - B. MATERIAL DELIVERY AND STORAGE:
      PROVIDE A DESIGNATED MATERIAL STORAGE AREA WITH SECONDARY CONTAINMENT SUCH AS BERMING. STORE MATERIAL ON PALLETS AND PROVIDE COVERING FOR SOLUBLE MATERIALS. RELOCATE STORAGE AREA INTO BUILDING SHELL WHEN POSSIBLE. INSPECT AREA WEEKLY.
    - C. CONCRETE WASTE:
      PROVIDE A DESIGNATED AREA FOR A TEMPORARY PIT TO BE USED FOR CONCRETE TRUCK WASH-OUT. DISPOSE OF HARDENED CONCRETE OFFSITE. AT NO TIME SHALL A CONCRETE TRUCK DUMP ITS WASTE AND CLEAN ITS TRUCK INTO THE CITY STORM DRAINS VIA CURB AND GUTTER. INSPECT DAILY TO CONTROL RUNOFF, AND WEEKLY FOR REMOVAL OF HARDENED CONCRETE.
    - D. PAINT AND PAINTING SUPPLIES:
      PROVIDE INSTRUCTION TO EMPLOYEES AND SUBCONTRACTORS REGARDING REDUCTION OF POLLUTANTS INCLUDING MATERIAL STORAGE, USE, AND CLEAN UP. INSPECT SITE WEEKLY FOR EVIDENCE OF IMPROPER DISPOSAL.
    - E. VEHICLE FUELING, MAINTENANCE AND CLEANING:
      PROVIDE A DESIGNATED FUELING AREA WITH SECONDARY CONTAINMENT SUCH AS BERMING. DO NOT ALLOW MOBILE FUELING OF EQUIPMENT. PROVIDE EQUIPMENT WITH DRIP PANS. RESTRICT ONSITE MAINTENANCE AND CLEANING OF EQUIPMENT TO A MINIMUM. INSPECT AREA WEEKLY.
    - F. HAZARDOUS WASTE MANAGEMENT:
      PREVENT THE DISCHARGE OF POLLUTANTS FROM HAZARDOUS WASTES TO THE DRAINAGE SYSTEM THROUGH PROPER MATERIAL USE, WASTE DISPOSAL AND TRAINING OF EMPLOYEES. HAZARDOUS WASTE PRODUCTS COMMONLY FOUND ON-SITE INCLUDE BUT ARE NOT LIMITED TO PAINTS & SOLVENTS, PETROLEUM PRODUCTS, FERTILIZERS, HERBICIDES & PESTICIDES, SOIL STABILIZATION PRODUCTS, ASPHALT PRODUCTS AND CONCRETE CURING PRODUCTS.

CONSTRUCTION NOTES:

1. PLACE FIBER ROLL AT TOP BACK OF WALK AND TOP BACK OF CURB PER CITY OF SACRAMENTO STD DWG Q-40, SHEET C9.
2. INSTALL STORM DRAIN SEDIMENT BARRIER AND INLET FILTER PER CITY OF SACRAMENTO STD DWG Q-20 AND Q-30, SHEET C9.
3. INSTALL TEMPORARY STABILIZED CONSTRUCTION ENTRANCE PER CITY OF SACRAMENTO STD DWG Q-10, SHEET C9.
4. CONCRETE WASHOUT PER DETAIL 2, SEE SHEET C9.- REF. CASQA BMP WM-8.
5. PLACE PORTABLE TOILET FOR USE DURING CONSTRUCTION. ANCHOR TO PREVENT OVERTURNING - REF. CASQA BMP WM-9.
6. INSTALL TEMPORARY 6' HIGH CHAINLINK SECURITY FENCE.
7. STAGING AREA, MATERIAL STORAGE, TEMPORARY STOCKPILE STORAGE AREA, FUELING AREA.
8. PLACE TEMPORARY CULVERT EROSION SEDIMENT CHECK DAM PER DETAIL 1, ON SHEET C9.

NOTE:

THE CONTRACTOR SHALL COMPLY WITH THE CITY OF SACRAMENTO ADMINISTRATIVE AND TECHNICAL MANUAL FOR GRADING/EROSION AND SEDIMENT CONTROL. CONTRACTOR SHALL HAVE ALL APPROPRIATE EROSION AND SEDIMENT CONTROL MEASURES IN PLACE FOR THE WINTER MONTHS PRIOR TO OCTOBER 1ST AND MUST ENSURE THAT THE CONSTRUCTION SITE IS PREPARED FOR THE ONSET OF ANY STORM.

811 Know what's below. Call before you dig. or (800) 227-2600

NO.	REVISION	DATE	BY	APPRV'D

	BY	CHECK
DESIGN	MJW	RFE
DRAWN	DCJ	RFE
QUANT.		

ORIGINAL SCALE IS IN INCHES (0 1 2)

REGISTERED PROFESSIONAL ENGINEER ROBERT F. ECKER No. C040666 Exp. 3-31-25 CIVIL STATE OF CALIFORNIA
11/13/2023

CWE
2260 Douglas Blvd, Suite 160, Roseville, CA 95661
Ph: 916-772-1900 | www.cwecorp.com

PROPERTY OWNER / DEVELOPER
NERRADSCALI CORPORATION
3950 KINGSBARNS DRIVE
ROSEVILLE, CA 95747
CONTACT: DARREN BROWN
PH: (916) 300-7962
EMAIL: DARRENBBROWN@COMCAST.NET

ON-SITE IMPROVEMENT PLANS FOR
NERRADSCALI SUBDIVISION
SACRAMENTO, CA 95838
APN: 237-0200-092

EROSION AND SEDIMENT CONTROL PLAN

Sheet **C8**

11/13/2023

CWE PROJECT NO. 21-188 - 905 NORTH AVENUE, SACRAMENTO, CA 95838

W:\2021 Projects\21-188 905 North Ave Sac\Working CAD\ONSITE C8 EROSION CNTL.dwg Nov 13, 2023-09:25 am

EROSION AND SEDIMENT CONTROL NOTES:

1. THE CONTRACTOR SHALL FOLLOW ALL JURISDICTIONAL GUIDELINES FOR GRADING AND THE EROSION AND SEDIMENT CONTROL MEASURES SHOWN OR STATED ON THESE PLANS.

2. CONTRACTOR MUST ENSURE THAT THE CONSTRUCTION SITE IS PREPARED PRIOR TO THE ONSET OF ANY STORM. CONTRACTOR SHALL HAVE ALL EROSION AND SEDIMENT CONTROL MEASURES IN PLACE FOR THE WINTER MONTHS PRIOR TO OCTOBER 1.

3. ALL EROSION AND SEDIMENT CONTROL MEASURES SHALL BE MAINTAINED UNTIL DISTURBED AREAS ARE STABILIZED. CHANGES TO THIS EROSION AND SEDIMENT CONTROL PLAN SHALL BE MADE TO MEET FIELD CONDITIONS ONLY WITH THE APPROVAL OF OR AT THE DIRECTION OF A REPRESENTATIVE OF THE DEPARTMENT OF UTILITIES.

4. THIS PLAN MAY NOT COVER ALL THE SITUATIONS THAT ARISE DURING CONSTRUCTION DUE TO UNANTICIPATED FIELD CONDITIONS. VARIATIONS MAY BE MADE TO THE PLAN IN THE FIELD SUBJECT TO THE APPROVAL OF OR AT THE DIRECTION OF A REPRESENTATIVE OF THE DEPARTMENT OF UTILITIES.

5. ALL EROSION AND SEDIMENT CONTROL MEASURES SHALL BE CHECKED BEFORE AND AFTER ALL STORMS TO ENSURE MEASURES ARE FUNCTIONING PROPERLY.

6. CONTRACTOR SHALL MAINTAIN A LOG AT THE SITE OF ALL INSPECTIONS OR MAINTENANCE OF BMPS, AS WELL AS, ANY CORRECTIVE CHANGES TO THE BMPS OR EROSION AND SEDIMENT CONTROL PLAN.

7. IN AREAS WHERE SOIL IS EXPOSED, PROMPT REPLANTING WITH NATIVE COMPATIBLE, DROUGHT-RESISTANT VEGETATION SHALL BE PERFORMED. NO AREAS WILL BE LEFT EXPOSED OVER THE WINTER SEASON.

8. THE CONTRACTOR SHALL INSTALL THE STABILIZED CONSTRUCTION ENTRANCE PRIOR TO COMMENCEMENT OF GRADING. LOCATION OF THE ENTRANCE MAY BE ADJUSTED BY THE CONTRACTOR TO FACILITATE GRADING OPERATIONS. ALL CONSTRUCTION TRAFFIC ENTERING THE PAVED ROAD MUST CROSS THE STABILIZED CONSTRUCTION ENTRANCE. THE STABILIZED CONSTRUCTION ENTRANCE SHALL REMAIN IN PLACE UNTIL THE ROAD BASE ROCK COURSE IS COMPLETED.

9. ALL SEDIMENT DEPOSITED ON PAVED ROADWAYS SHALL BE SWEPT AT THE END OF EACH WORKING DAY OR AS NECESSARY.

10. CONTRACTOR SHALL PLACE GRAVEL BAG BARRIERS AROUND ALL NEW DRAINAGE STRUCTURE OPENINGS IMMEDIATELY AFTER THE STRUCTURE OPENING IS CONSTRUCTED. THESE GRAVEL BAG BARRIERS SHALL BE MAINTAINED AND REMAIN IN PLACE UNTIL CONSTRUCTION IS COMPLETED.

11. CONTRACTOR SHALL FOLLOW DUST CONTROL METHODS INCLUDING:
A. WATERING THE SOIL OF THE SITE AND THE ADJACENT STREETS BEING USED IN CONNECTION WITH SOIL DISTURBANCE OPERATIONS ON THE SITE.
B. COMPLETELY COVER GRAVEL OR ROCK LANDSCAPING UNTIL STABILIZED.
D. WATER GRASSES AND LANDSCAPING UNTIL STABILIZED.

12. CONTRACTOR SHALL IMPLEMENT HOUSEKEEPING PRACTICES AS FOLLOWS:
A. SOLID WASTE MANAGEMENT:
PROVIDE DESIGNATED WASTE COLLECTION AREAS AND CONTAINERS. ARRANGE FOR REGULAR REMOVAL AND DISPOSAL. CLEAR SITE OF TRASH INCLUDING ORGANIC DEBRIS, PACKAGING MATERIALS, SCRAP OR SURPLUS BUILDING MATERIALS AND DOMESTIC WASTE DAILY.
B. MATERIAL DELIVERY AND STORAGE:
PROVIDE A DESIGNATED MATERIAL STORAGE AREA WITH SECONDARY CONTAINMENT SUCH AS BERMING. STORE MATERIAL ON PALLETS AND PROVIDE COVERING FOR SOLUBLE MATERIALS. RELOCATE STORAGE AREA INTO BUILDING SHELL WHEN POSSIBLE. INSPECT AREA WEEKLY.
C. CONCRETE WASTE:
PROVIDE A DESIGNATED AREA FOR A TEMPORARY PIT TO BE USED FOR CONCRETE TRUCK WASH-OUT. DISPOSE OF HARDENED CONCRETE OFFSITE. AT NO TIME SHALL A CONCRETE TRUCK DUMP ITS WASTE AND CLEAN ITS TRUCK INTO THE CITY STORM DRAINS VIA CURB AND GUTTER. INSPECT DAILY TO CONTROL RUNOFF, AND WEEKLY FOR REMOVAL OF HARDENED CONCRETE.
D. PAINT AND PAINTING SUPPLIES:
PROVIDE INSTRUCTION TO EMPLOYEES AND SUBCONTRACTORS REGARDING REDUCTION OF POLLUTANTS INCLUDING MATERIAL STORAGE, USE, AND CLEAN UP. INSPECT SITE WEEKLY FOR EVIDENCE OF IMPROPER DISPOSAL.
E. VEHICLE FUELING, MAINTENANCE AND CLEANING:
PROVIDE A DESIGNATED FUELING AREA WITH SECONDARY CONTAINMENT SUCH AS BERMING. DO NOT ALLOW MOBILE FUELING OF EQUIPMENT. PROVIDE EQUIPMENT WITH DRIP PANS. RESTRICT ON-SITE MAINTENANCE AND CLEANING OF EQUIPMENT TO A MINIMUM. INSPECT AREA WEEKLY.
F. HAZARDOUS WASTE MANAGEMENT:
PREVENT THE DISCHARGE OF POLLUTANTS FROM HAZARDOUS WASTES TO THE DRAINAGE SYSTEM THROUGH PROPER MATERIAL USE, WASTE DISPOSAL AND TRAINING OF EMPLOYEES. HAZARDOUS WASTE PRODUCTS COMMONLY FOUND ON-SITE INCLUDE BUT ARE NOT LIMITED TO PAINTS & SOLVENTS, PETROLEUM PRODUCTS, FERTILIZERS, HERBICIDES & PESTICIDES, SOIL STABILIZATION STABILIZATION PRODUCTS, ASPHALT PRODUCTS AND CONCRETE CURING PRODUCTS.

PHASE OF CONSTRUCTION	EROSION AND SEDIMENT CONTROL MEASURES												
	(WET SEASON)				(WET AND DRY SEASON)								
	HYDRO-SEEDING	STRAW MULCHING & TACTIFIER	PRESERVATION OF EXISTING VEGETATION	SOIL BINDERS	FIBER ROLLS	OUTLET PROTECTION	STORM DRAIN INLET PROTECTION	DEWATERING	STABILIZED CONSTRUCTION ENTRANCE	MATERIAL & WASTE DISPOSAL LOCATION	CONCRETE WASHOUT	DUST CONTROL	SEDIMENT TRAP
PRE-GRADING			●		●		●		●	●		●	●
CUT AND FILL ACTIVITIES	●	●		●				●				●	●
UNDERGROUND WORK												●	
STORM DRAIN IMPROVEMENTS						●					●	●	
CURB & GUTTER							●					●	
STREET IMPROVEMENTS					●							●	
POST CONSTRUCTION	●	●	●										

NOTES:
1. ALL EROSION BMPs SHALL BE IN PLACE PRIOR TO STORM EVENTS AND IN ACCORDANCE WITH THE LATEST EDITION OF SECTION II OF THE IMPROVEMENT STANDARDS AND THE CALIFORNIA STORM WATER HANDBOOK.
2. MAINTAIN BMP'S AS NECESSARY.

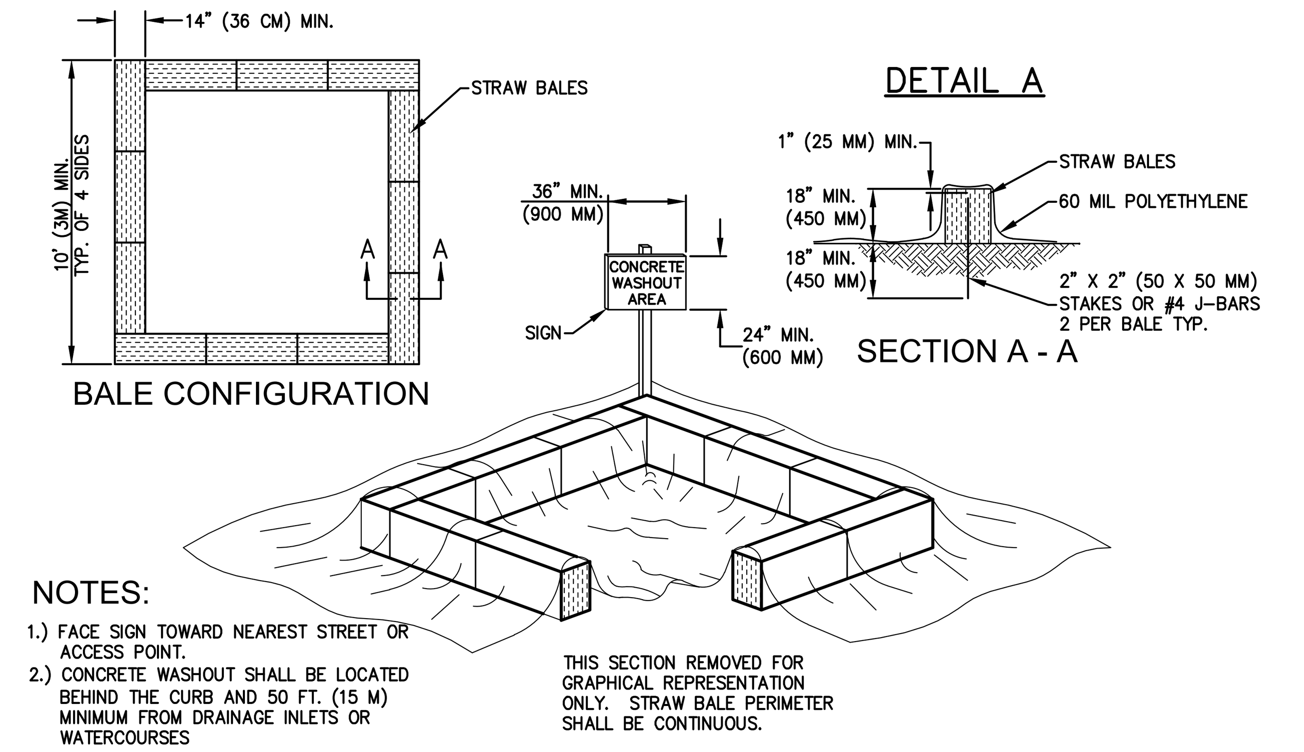

NOTES:
1.) FACE SIGN TOWARD NEAREST STREET OR ACCESS POINT.
2.) CONCRETE WASHOUT SHALL BE LOCATED BEHIND THE CURB AND 50 FT. (15 M) MINIMUM FROM DRAINAGE INLETS OR WATERCOURSES

2 / - CONCRETE WASHOUT
NOT TO SCALE

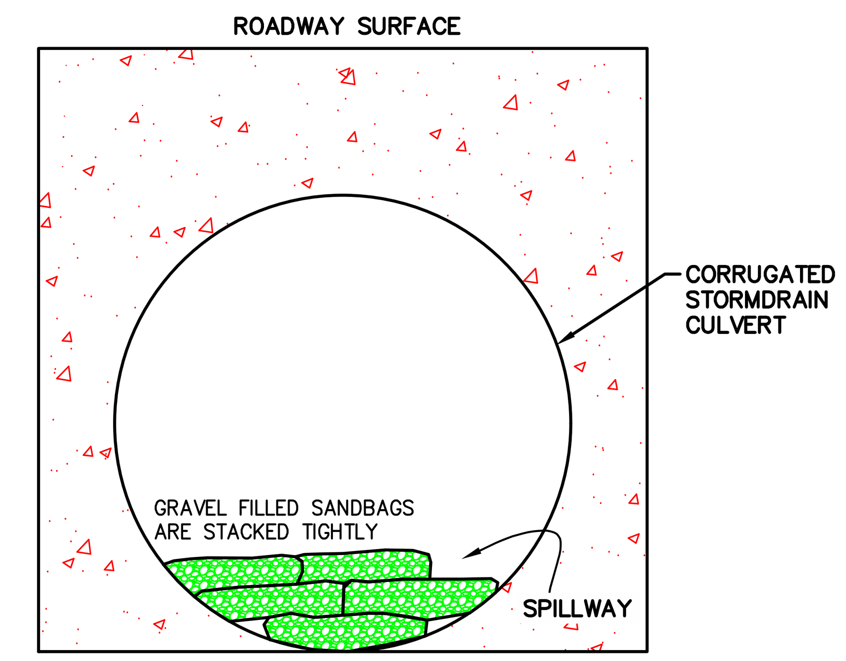

ELEVATION VIEW

1 / - CULVERT CHECK DAM DETAIL
NOT TO SCALE

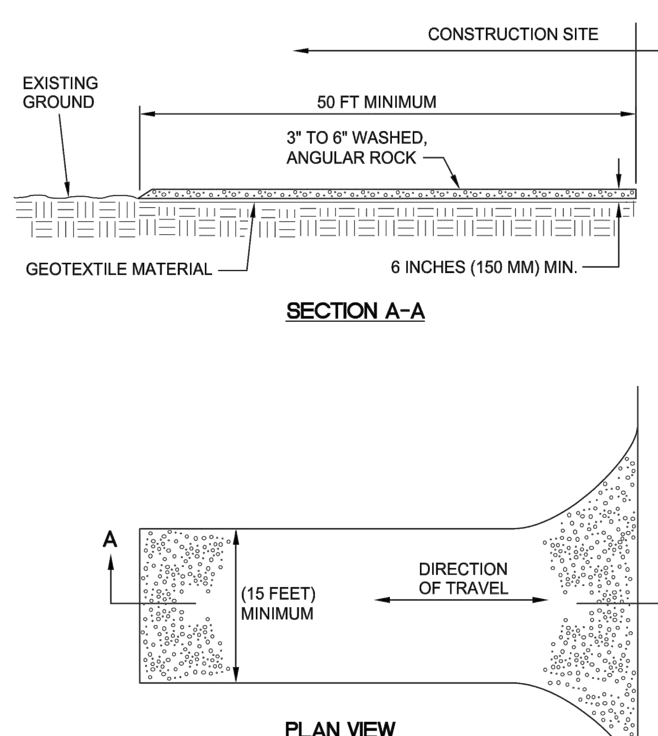

NOTES:
1. STABILIZED CONSTRUCTION ENTRANCE SHALL BE CONSTRUCTED OF 3" TO 6" WASHED, ANGULAR ROCK. MATERIAL SHALL BE PLACED TO A MINIMUM THICKNESS OF 6 INCHES.
2. LENGTH OF ENTRANCE SHALL BE A MINIMUM OF 50 FEET. WIDTH SHALL BE A MIN. OF 15 FT OR GREATER IF NECESSARY TO COVER ALL VEHICULAR INGRESS AND EGRESS. PROVIDE AMPLE TURNING RADII.
3. THE ENTRANCE SHALL BE KEPT IN GOOD CONDITION BY OCCASIONAL TOP DRESSING WITH MATERIAL AS SPECIFIED IN NOTE 1.
4. ACCESSES SHALL BE INSPECTED WEEKLY DURING PERIODS OF HEAVY USAGE, MONTHLY DURING NORMAL USAGE, AND AFTER EACH RAINFALL, WITH MAINTENANCE PROVIDED AS NECESSARY. PERIODIC TOP DRESSING SHALL BE DONE AS NEEDED.

REV.	DATE	DESCRIPTION
△		
△		
△		

CITY OF SACRAMENTO
DEPARTMENT OF UTILITIES
STABILIZED CONSTRUCTION ENTRANCE
APPR'D BY: NO SCALE
DATE: MAY 2007 DWG. NO. Q - 10

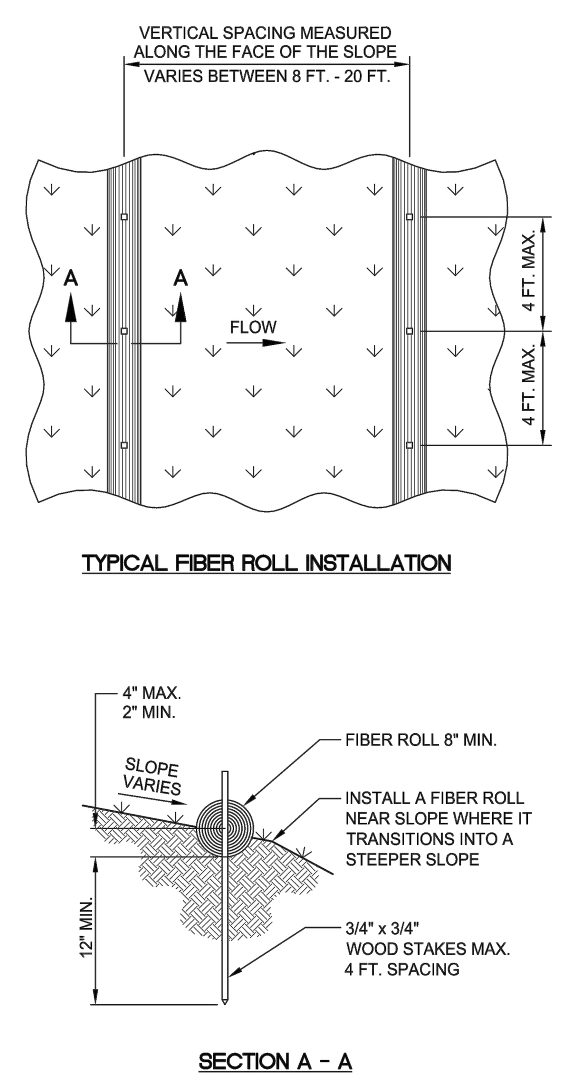

NOTES:
1.- INSTALL FIBER ROLLS IN A ROW ALONG A LEVEL CONTOUR.
2.- AT ENDS OF A ROW TURN THE LAST TWO FEET UP SLOPE SLIGHTLY.
3.- FIBER ROLLS SHALL BE BUTTED TIGHTLY AT THE JOINTS.
4.- DO NOT OVERLAP JOINTS.
5.- FIBER ROLLS SHALL BE INSPECTED WEEKLY AND AFTER STORMS, AND REPAINTED OR REPLACED AS NEEDED.

REV.	DATE	DESCRIPTION
△		
△		
△		

CITY OF SACRAMENTO
DEPARTMENT OF UTILITIES
FIBER ROLLS
APPR'D BY: NO SCALE
DATE: MAY 2007 DWG. NO. Q - 40

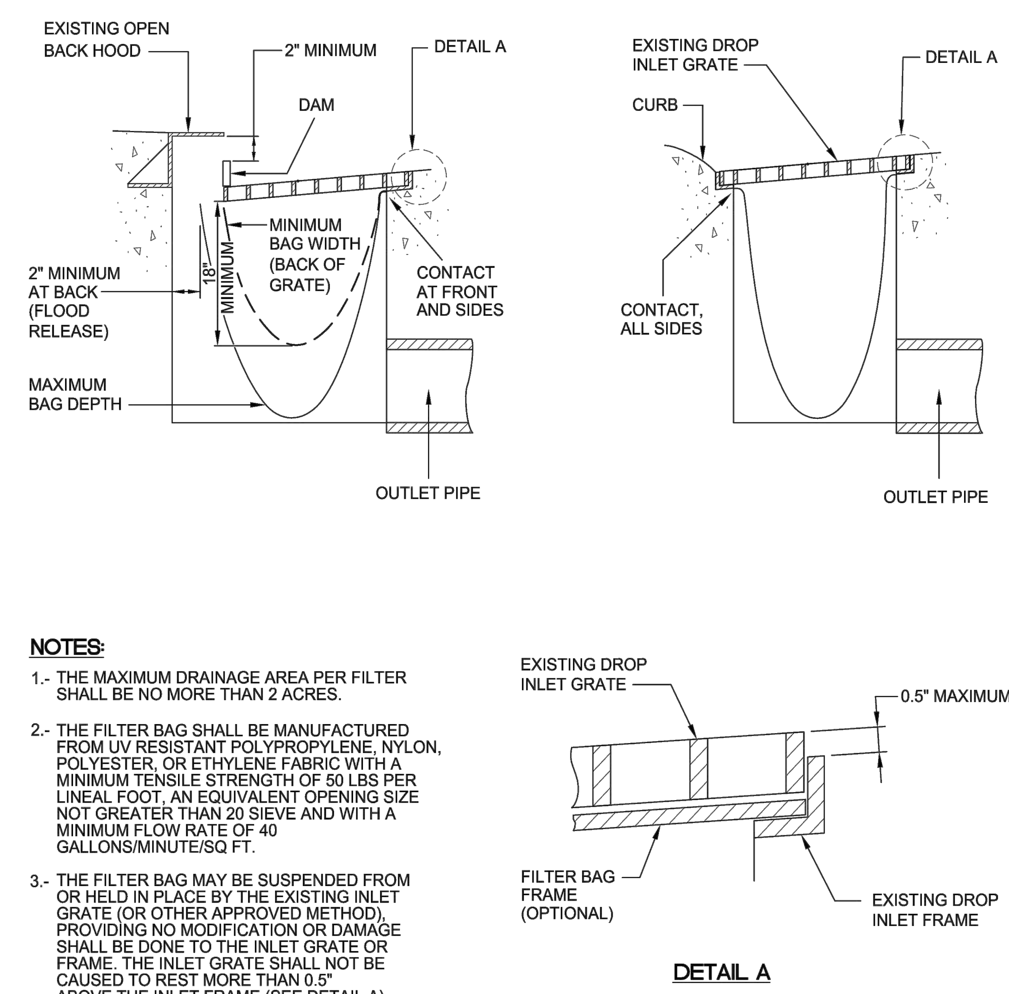

NOTES:
1.- THE MAXIMUM DRAINAGE AREA PER FILTER SHALL BE NO MORE THAN 2 ACRES.
2.- THE FILTER BAG SHALL BE MANUFACTURED FROM UV RESISTANT POLYPROPYLENE, NYLON, POLYESTER, OR ETHYLENE FABRIC WITH A MINIMUM TENSILE STRENGTH OF 50 LBS PER LINEAL FOOT, AN EQUIVALENT OPENING SIZE NOT GREATER THAN 20 SIEVE AND WITH A MINIMUM FLOW RATE OF 40 GALLONS/MINUTE/SQ FT.
3.- THE FILTER BAG MAY BE SUSPENDED FROM OR HELD IN PLACE BY THE EXISTING INLET GRATE (OR OTHER APPROVED METHOD), PROVIDING NO MODIFICATION OR DAMAGE SHALL BE DONE TO THE INLET GRATE OR FRAME. THE INLET GRATE SHALL NOT BE CAUSED TO REST MORE THAN 0.5" ABOVE THE INLET FRAME (SEE DETAIL A).
4.- THE FILTER BAG MAY EXTEND TO THE BOTTOM OF THE INLET BOX PROVIDED THE OUTLET PIPE IS UNOBSTRUCTED.
5.- FLOWS SHALL NOT BE ALLOWED TO BYPASS THE BAG. THE BAG OR ITS FRAME SHALL CATCH FLOWS AT ALL SIDES OF THE INLET, EXCEPT AS SHOWN FOR FLOOD RELEASE.
6.- INLET FILTER BAGS SHALL BE INSPECTED WEEKLY AND AFTER EACH RAINFALL DURING THE WET SEASON AND MONTHLY DURING THE DRY SEASON. SEDIMENT AND DEBRIS SHALL BE REMOVED BEFORE ACCUMULATIONS HAVE REACHED ONE THIRD THE DEPTH OF THE BAG. BAGS SHALL BE REPAIRED OR REPLACED AS SOON AS DAMAGE OCCURS.
7.- THIS DETAIL IS SCHEMATIC AND MUST BE ADJUSTED FOR DIFFERENT DI TYPES.

REV.	DATE	DESCRIPTION
△		
△		
△		

CITY OF SACRAMENTO
DEPARTMENT OF UTILITIES
STORM DRAIN INLET FILTER BAG
APPR'D BY: NO SCALE
DATE: MAY 2007 DWG. NO. Q - 30

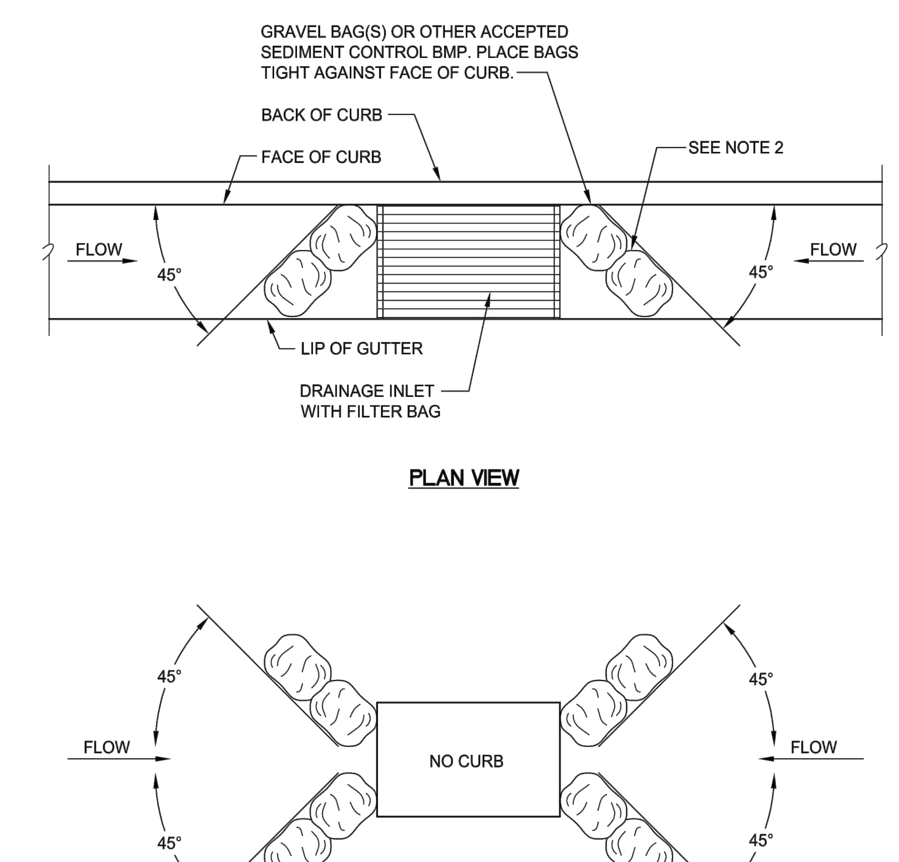

NOTES:
1.- SEDIMENT TRAPPED UPSTREAM OF SEDIMENT CONTROL BMP SHALL BE REMOVED WEEKLY AND PRIOR TO A RAINFALL EVENT.
2.- PLACE BMP'S TIGHTLY TOGETHER AT JOINTS TO PREVENT OR MINIMIZE SEEPAGE AT JOINTS.
3.- INLET SEDIMENT CONTROL MUST BE INSPECTED WEEKLY AND AFTER EACH STORM, AND REPAIRED OR REPLACED AS NEEDED.
4.- INLET SEDIMENT CONTROL IS REQUIRED FOR ALL DI's IN ADDITION TO A STORM DRAIN INLET FILTER BAG.

REV.	DATE	DESCRIPTION
△		
△		
△		

CITY OF SACRAMENTO
DEPARTMENT OF UTILITIES
INLET SEDIMENT CONTROL
APPR'D BY: NO SCALE
DATE: MAY 2007 DWG. NO. Q - 20

NO.	REVISION	DATE	BY	APPRV'D

	BY	CHECK
DESIGN	MJW	RFE
DRAWN	DCJ	RFE
QUANT.		

0 1 2 ORIGINAL SCALE IS IN INCHES

REGISTERED PROFESSIONAL ENGINEER ROBERT F. EYNCK No. C040666 Exp. 3-31-25 CIVIL STATE OF CALIFORNIA 11/13/2023

2260 Douglas Blvd, Suite 160, Roseville, CA 95661
Ph: 916-772-7800 | www.cwecorp.com

PROPERTY OWNER / DEVELOPER
NERRADSCALI CORPORATION
3960 KINGSBARNS DRIVE
ROSEVILLE, CA 95747
CONTACT: DARREN BROWN
PH: (916) 300-7962
EMAIL: DARRENBBROWN@COMCAST.NET

ON-SITE IMPROVEMENT PLANS FOR
NERRADSCALI SUBDIVISION
SACRAMENTO, CA 95838
APN: 237-0200-092

EROSION AND SEDIMENT CONTROL NOTES AND DETAILS

Sheet
C9

CWE PROJECT NO. 21-188 – 905 NORTH AVENUE, SACRAMENTO, CA 95838

W:\2021 Projects\21-188 905 North Ave Sac\Working CAD\ONSITE C9 EROSION DTLS.dwg Nov 13, 2023–09:26 am

8 — NTS — 2" BLOW-OFF VALVE

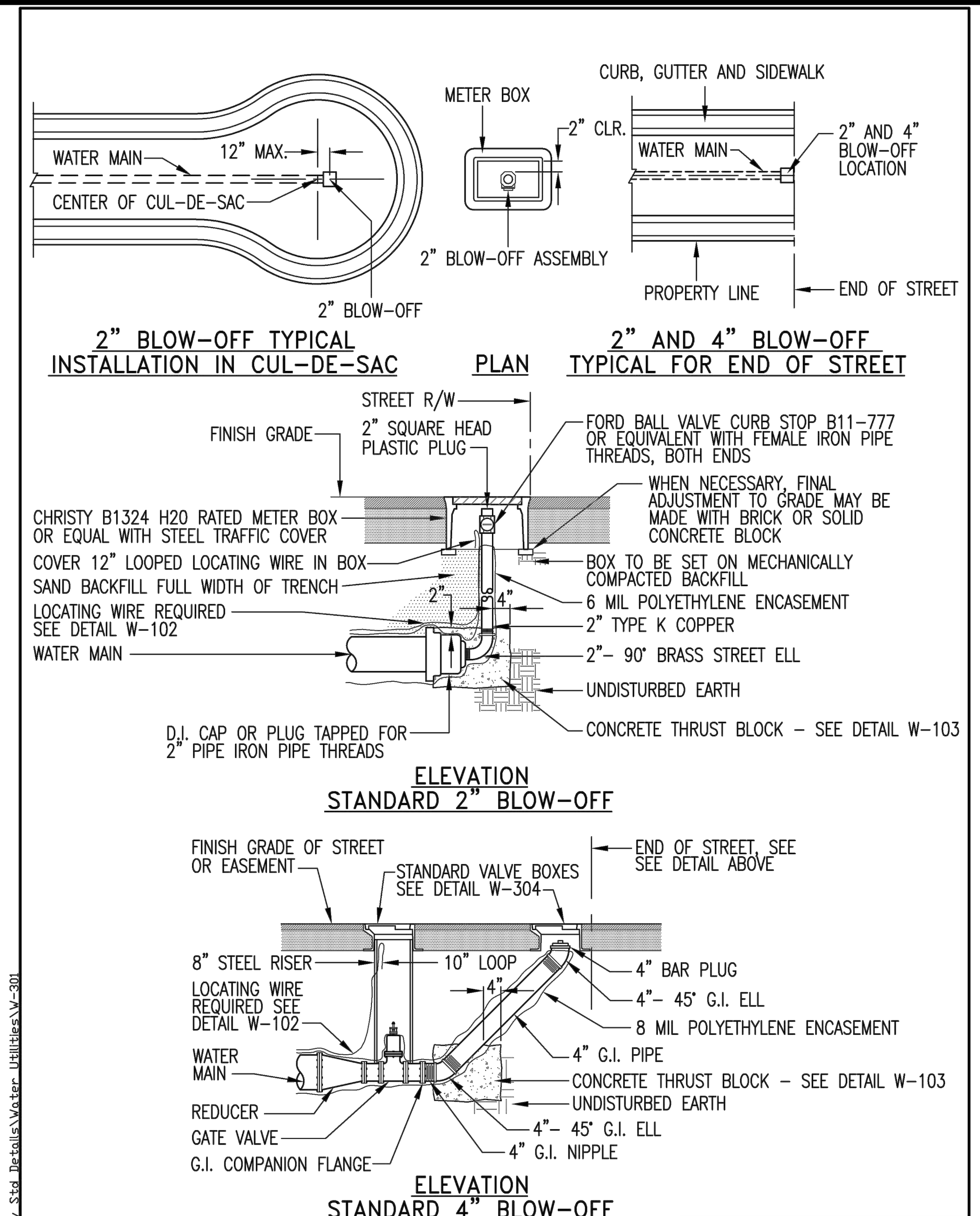

R:\Utilstds\City Std Details\Water Utilities\W-301

REV.	DATE	DESCRIPTION

CITY OF SACRAMENTO DEPARTMENT OF UTILITIES — STANDARD 2-INCH AND 4-INCH BLOW-OFF — APPR'D BY: [signature] NO SCALE — DATE: MAY 2007 — DWG. NO. W - 301

7 — NTS — VALVE BOX AND DROP CAP DETAIL

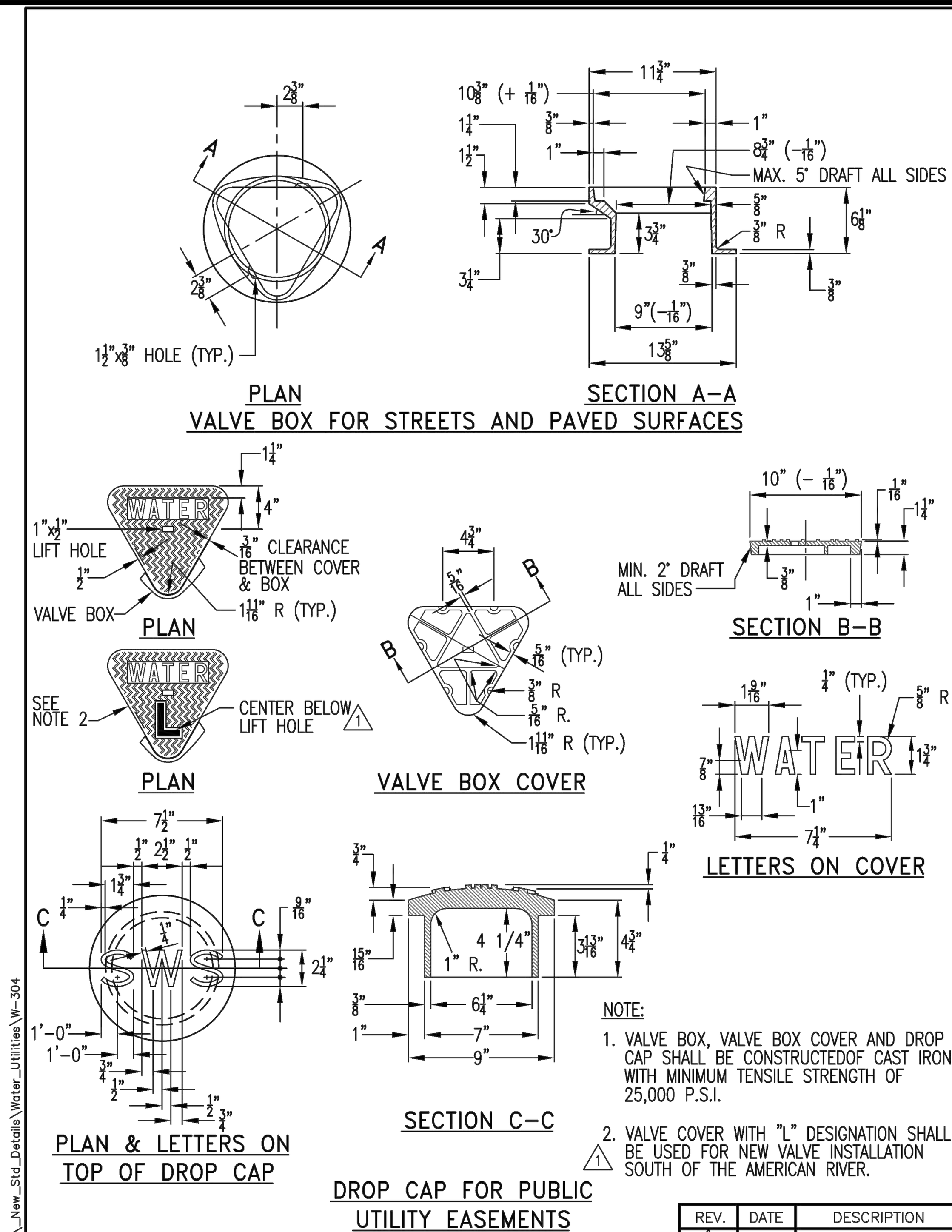

NOTE:

1. VALVE BOX, VALVE BOX COVER AND DROP CAP SHALL BE CONSTRUCTEDOF CAST IRON WITH MINIMUM TENSILE STRENGTH OF 25,000 P.S.I.
2. VALVE COVER WITH "L" DESIGNATION SHALL BE USED FOR NEW VALVE INSTALLATION SOUTH OF THE AMERICAN RIVER.

R:\Utilstds_New_Std_Details\Water_Utilities\W-304

REV.	DATE	DESCRIPTION
1	04-20-12	New Open Left

CITY OF SACRAMENTO DEPARTMENT OF UTILITIES — STANDARD VALVE BOX AND DROP CAP — APPR'D BY: [signature] NO SCALE — DATE: MAY 2007 — DWG. NO. W-304

Addendum #2, Page 47 of 81

6 — NTS — VALVE BOX INSTALLATION DETAIL

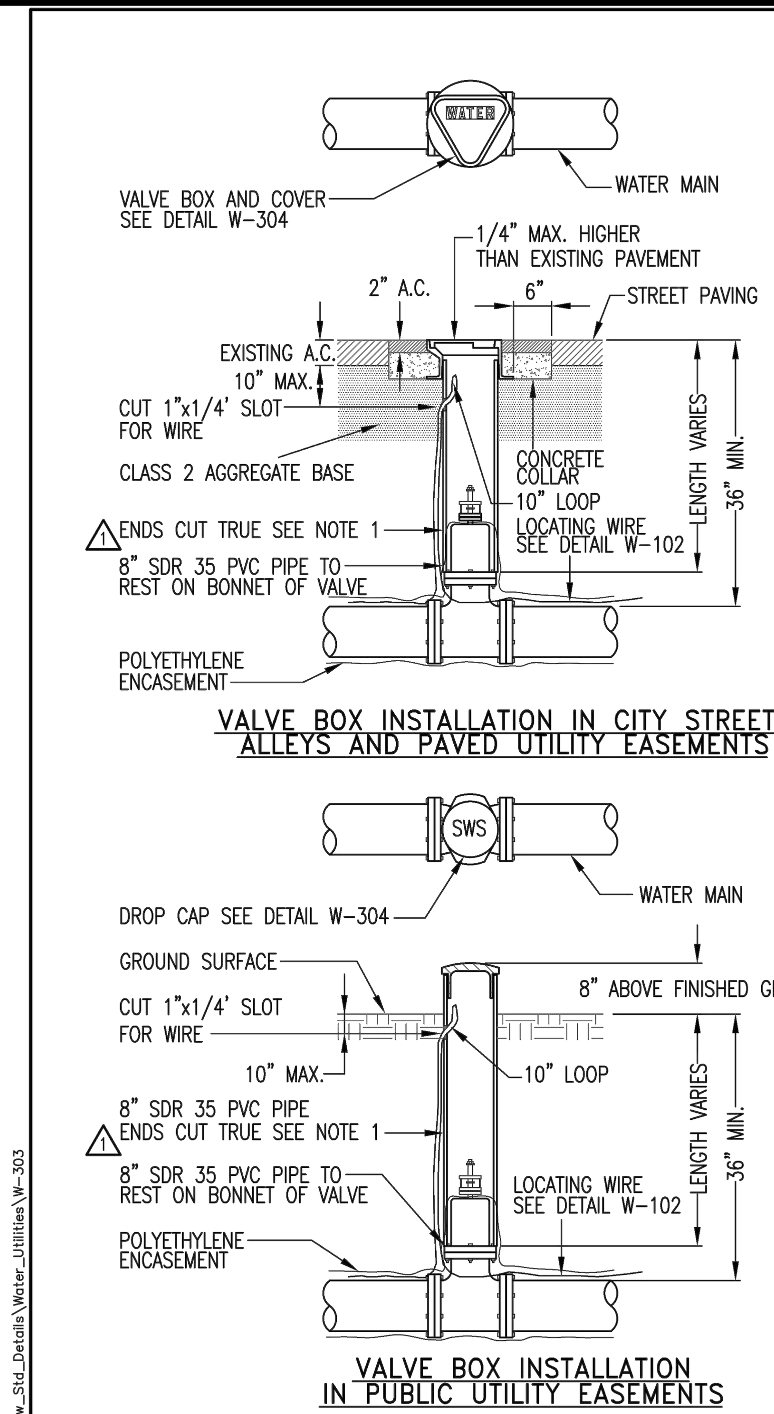

NOTE:

1. ONE (1) CONTINUOUS PIECE OR WELDED AS ONE PIECE
2. NUT EXTENSION REQUIRED WHEN VALVE NUT IS IN EXCESS OF 30" BELOW FINISH GRADE. SEE W-308.

NOTE:

1. ONE (1) CONTINUOUS PIECE OR WELDED AS ONE PIECE
2. NUT EXTENSION REQUIRED WHEN VALVE NUT IS IN EXCESS OF 30" BELOW FINISH GRADE. SEE W-308.

R:\Utilstds_New_Std_Details\Water_Utilities\W-303

REV.	DATE	DESCRIPTION
1	11/29/11	Material Change

CITY OF SACRAMENTO DEPARTMENT OF UTILITIES — STANDARD VALVE BOX INSTALLATION FOR CITY STREETS, ALLEY & EASEMENTS — APPR'D BY: [signature] NO SCALE — DATE: MAY 2007 — DWG. NO. W-303

Addendum #2, Page 46 of 81

5 — NTS — WATER SERVICE CONNECTION

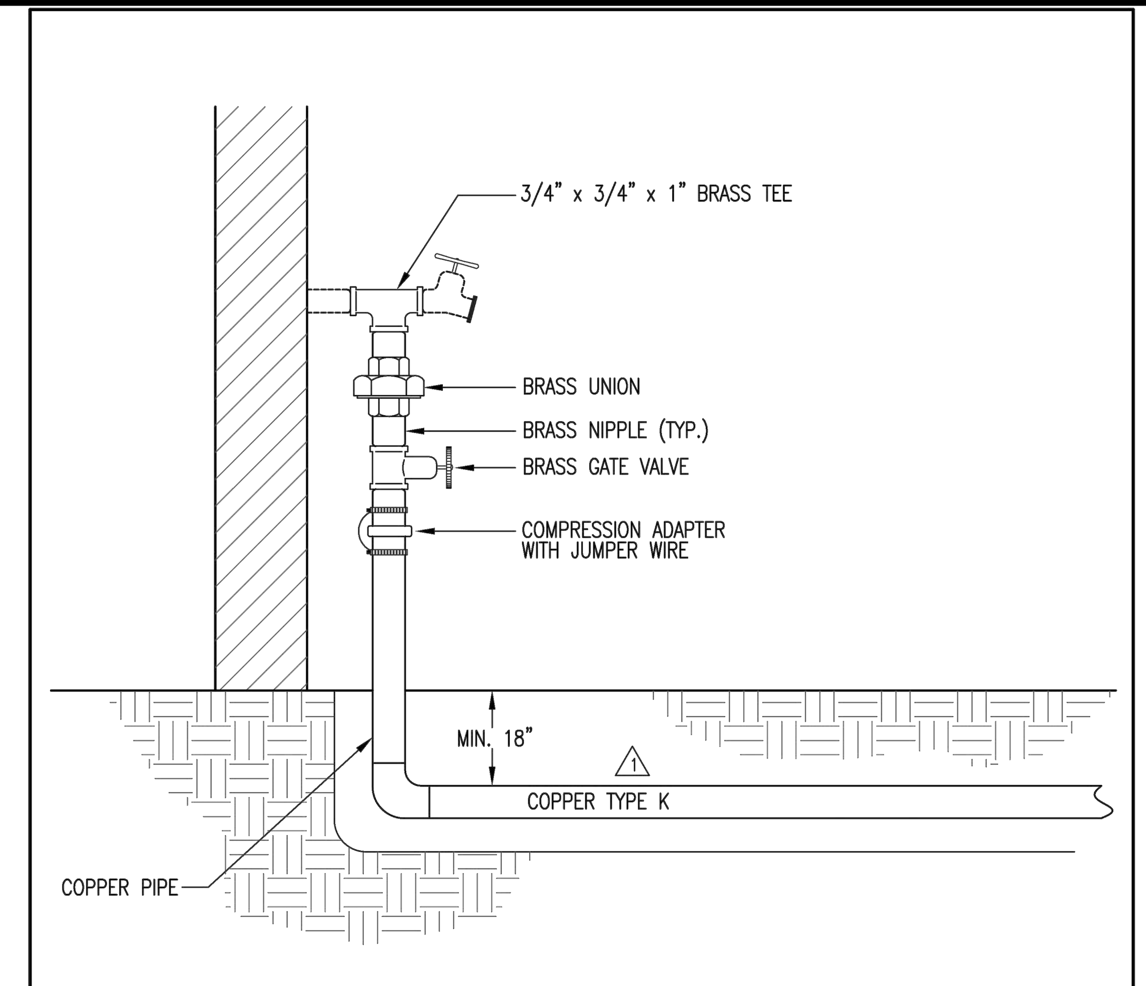

GENERAL NOTES

1. WATER SERVICE PIPE SHALL BE 1-INCH IN DIAMETER UP TO ABOVE GROUND TEE.
2. WHENEVER COPPER WATER SERVICE PIPE IS IN DIRECT CONTACT WITH CONCRETE, THE CONTRACTOR SHALL WRAP COPPER PIPE IN 35 MIL POLYKIN OR EQUAL, OR PLACE IN CASING.
3. WATER SERVICE PIPE MAY BE PLACED IN AN EXCAVATED TRENCH AND BACKFILLED, OR DIRECTIONALLY DRILLED.
4. PIPE ALIGNMENT SHALL NOT PASS UNDER ANY STRUCTURE.
5. WATER SERVICES AND THEIR INSTALLATION SHALL MEET APPLICABLE REQUIREMENTS OF SECTION 10 THRU 38 OF THESE SPECIFICATIONS.
6. TO TRANSITION FROM GALVANIZED PIPE TO COPPER PIPE, PLACE A BRASS UNION W/BRASS GATE VALVE BETWEEN GALVANIZED PIPE AND COPPER PIPE.

R:\Utilstds_New_Std_Details\Water_Utilities\W-406

REV.	DATE	DESCRIPTION
1	03-22-12	Type K Only

CITY OF SACRAMENTO DEPARTMENT OF UTILITIES — WATER SERVICE CONNECTION AT HOSE BIBB — APPR'D BY: [signature] NO SCALE — DATE: MAY 2007 — DWG. NO. W-406

Addendum #2, Page 53 of 81

4 — NTS — FIRE HYDRANT INSTALLATIONS

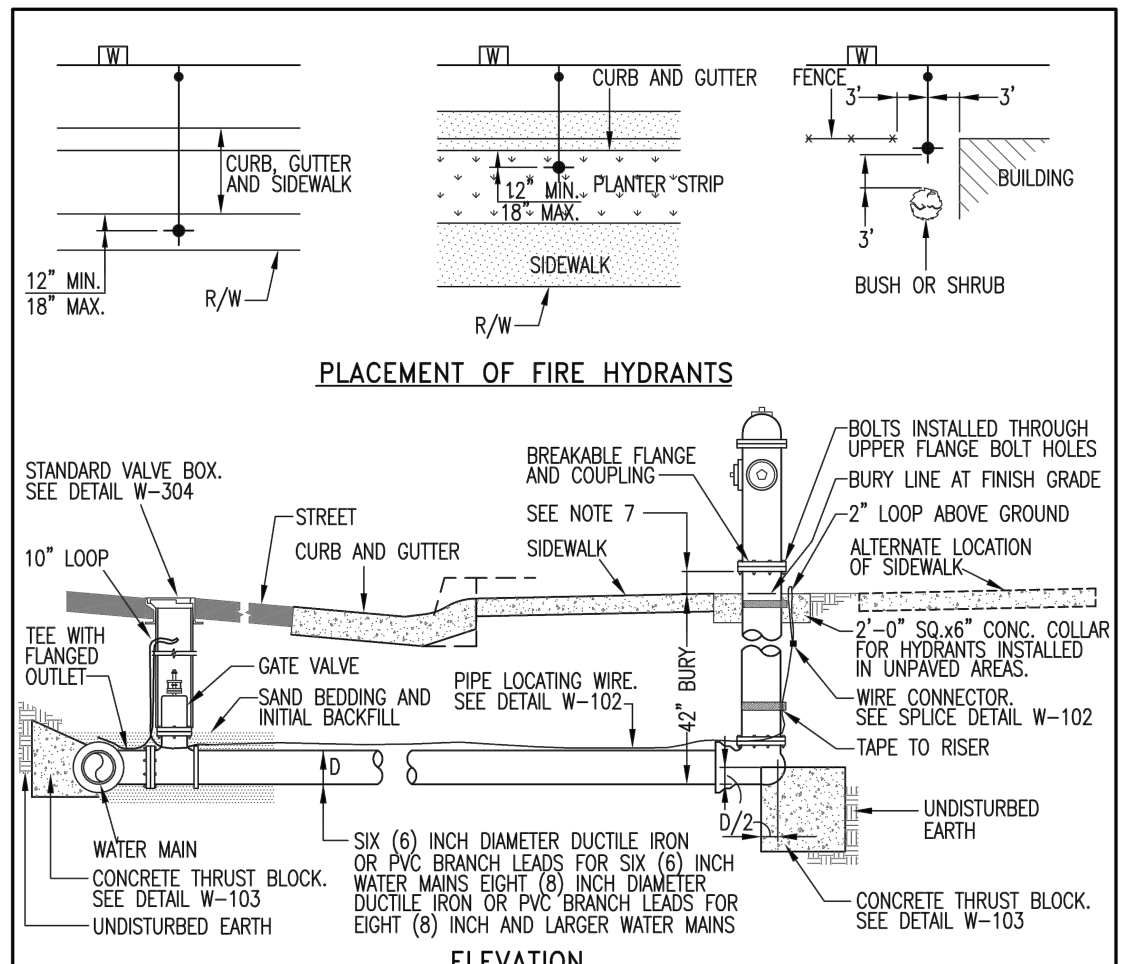

NOTES

1. BODY OF ALL FIRE HYDRANTS SHALL BE PAINTED WITH TWO COATS OF RUST-OLEUM PROFFESSIONAL OIL BASED ENAMEL ALUMINUM #7715 COLOR OR EQUAL.
2. TOP (BONNET OR DOME) OF ALL HYDRANTS SHALL BE PAINTED TO THE FOLLOWING COLOR CODE ACCORDING TO THE SIZE OF THE WATER MAIN THE HYDRANTS ARE CONNECTED TO:
   - ORANGE: FOR 4" OR SMALLER MAINS
   - RED: FOR 6" MAINS
   - YELLOW: FOR 8"-10" MAINS
   - GREEN: FOR 12" AND LARGER MAINS
3. RAISED PAVEMENT MARKERS, SHALL BE PLACED FOR EACH HYDRANT INSTALLATION IN ACCORDANCE WITH SECTION 32-4 OF THESE STANDARD SPECIFICATIONS.
4. THE BLUE REFLECTORS SHALL BE PLACED ON THE HYDRANT SIDE OF THE STREET 5" FROM THE STREET CENTERLINE IN DIRECTION OF THE HYDRANT WITH REFLECTOR SIDES FACING TRAFFIC. PROVIDE TWO MARKERS FOR HYDRANTS INSTALLED AT MAJOR STREET INTERSECTIONS.
5. ONLY ONE (1) 6" OR 12" EXTENSION MAY BE USED FOR FIRE HYDRANT ADJUSTMENT TO GRADE. ALL OTHER ADDITIONAL ADJUSTMENTS MAY BE MADE WITH THE USE OF 45° ELBOWS ON THE HYDRANT LEAD.
6. OPERATING NUT AND OUTLET NOZZLE CAP NUTS SHALL BE PENTAGON IN SHAPE.
7. FIRE HYDRANTS ARE TO BE INSTALLED SO THE BURY LINE IS AT FINISHED GRADE. IF THIS IS NOT POSSIBLE DUE TO EXISTING UTILITIES THEN THE FOLLOWING VARIANCE MAY BE ALLOWED. 2" MINIMUM AND 5" MAXIMUM, MEASURED FROM THE BOTTOM OF THE HYDRANT FLANGE TO FINISHED GRADE.

R:\Utilstds_New_Std_Details\Water_Utilities\W-201

REV.	DATE	DESCRIPTION

CITY OF SACRAMENTO DEPARTMENT OF UTILITIES — FIRE HYDRANT INSTALLATIONS — APPR'D BY: [signature] NO SCALE — DATE: SEPT 6, 2017 — DWG. NO. W-201

3 — NTS — 1" RESIDENTIAL WATER SERVICE DETAIL

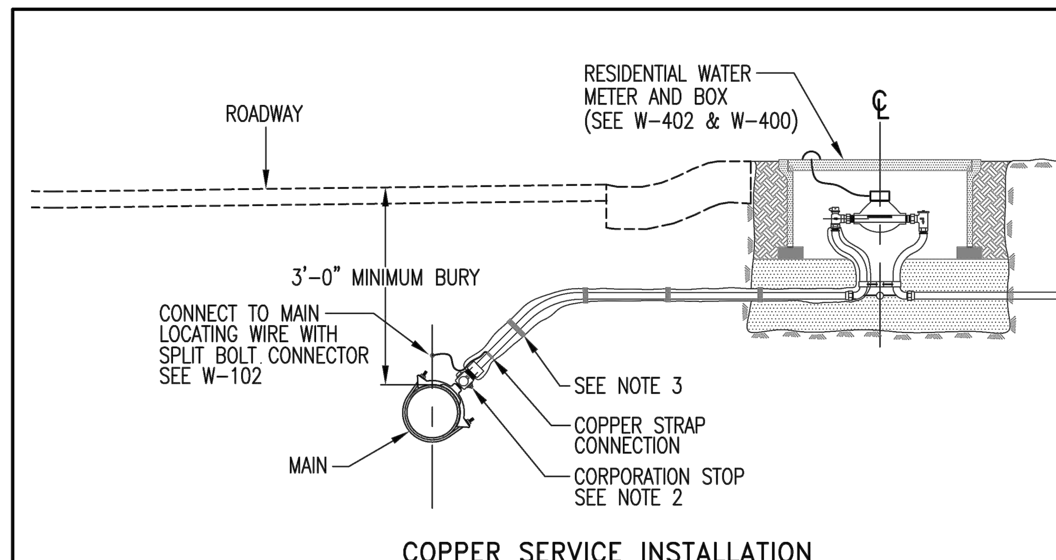

COPPER SERVICE INSTALLATION

NOTES:

1. COPPER TUBING AND METER SETTER TO BE SAME SIZE AS CORPORATION STOP.
2. SEE STANDARD DRAWING W-403 FOR DETAIL OF CONNECTION TO MAIN.
3. 6 MIL POLYETHYLENE WRAP WITH 10 MIL TAPE @ 5' INTERVALS SHALL BE REQUIRED.

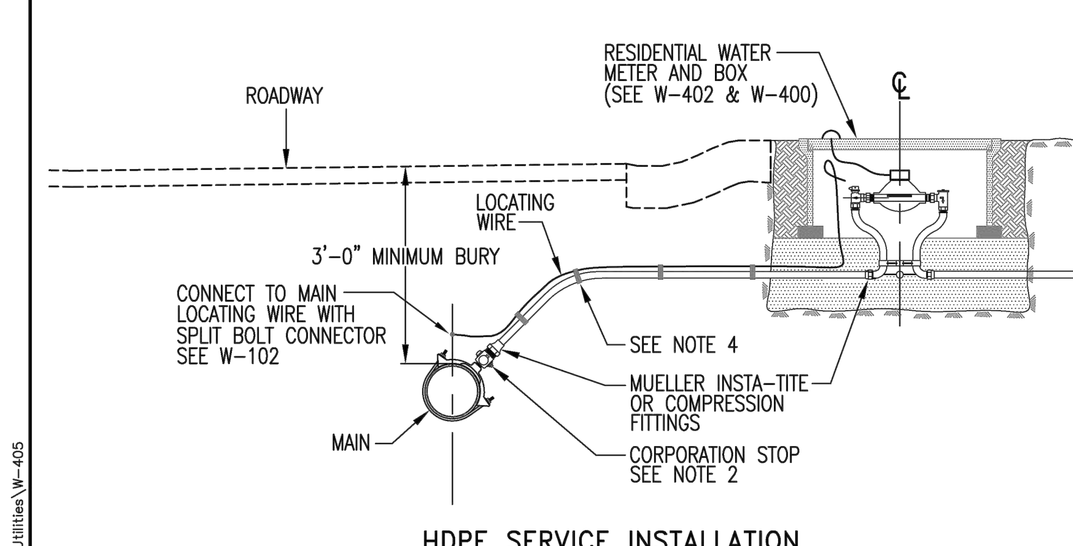

HDPE SERVICE INSTALLATION

NOTES:

1. COPPER TUBING SIZE HDPE PIPE AND METER SETTER TO BE SAME SIZE AS CORPORATION STOP.
2. SEE STANDARD DRAWING W-403 FOR DETAIL OF CONNECTION TO MAIN.
3. LOCATING WIRE TERMINATING IN METER BOX SHALL EXTEND INSIDE BOX A MINIMUM OF 10".
4. CONNECT LOCATING WIRE TO HDPE USING 10 MIL TAPE @ 3' INTERVALS.

R:\Utilstds_New_Std_Details\Water_Utilities\W-405

REV.	DATE	DESCRIPTION

CITY OF SACRAMENTO DEPARTMENT OF UTILITIES — 1" RES. WATER SERVICES — APPR'D BY: [signature] NO SCALE — DATE: SEPT 6, 2017 — DWG. NO. W-405

2 — NTS — WATER METER SETTER & BOX DETAIL

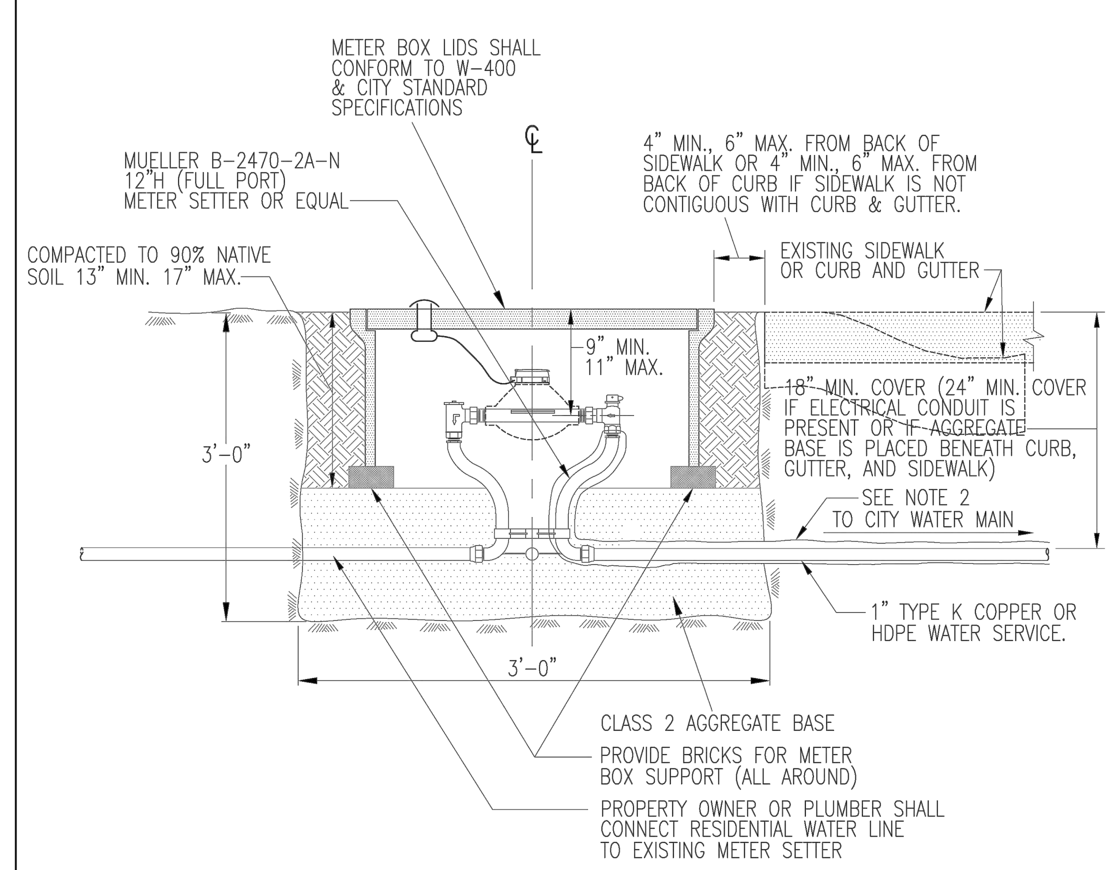

NOTE:

1. CITY FORCES WILL FURNISH AND INSTALL WATER METER AFTER PLUMBING PERMIT HAS BEEN ISSUED, AND METER FEES HAVE BEEN PAID. PROPERTY WILL NOT PASS FINAL INSPECTION WITHOUT WATER METER.
2. 6 MIL POLYETHYLENE WRAP WITH 10 MIL TAPE IS REQUIRED ON COPPER SERVICE (ONLY).
3. FOR STREETS INSTALLATIONS, METER BOXES SHALL BE CONSTRUCTED OF AN H20 TRAFFIC RATED (PER AASHTO-H20 LOAD TEST) CONCRETE MATERIAL AND SHALL MEET THE CAL TRANS No. 5T OR 6T STATE SPECIFICATION. LIDS SHALL BE H20 RATED. ALL LIDS SHALL BE PER CITY STD W-400.
4. ALLEYS AND UNIMPROVED STREET SHALL HAVE A TIER 22 BOX AND COVER FOR ALL 1" TO 2" METERS.

R:\Utilstds_New_Std_Details\Water_Utilities\W-402

REV.	DATE	DESCRIPTION

CITY OF SACRAMENTO DEPARTMENT OF UTILITIES — INSTALLATION OF RESIDENTIAL WATER METER SETTER & BOX — APPR'D BY: [signature] NO SCALE — DATE: JULY 28, 2017 — DWG. NO. W-402

1 — NTS — THRUST BLOCKING DETAIL

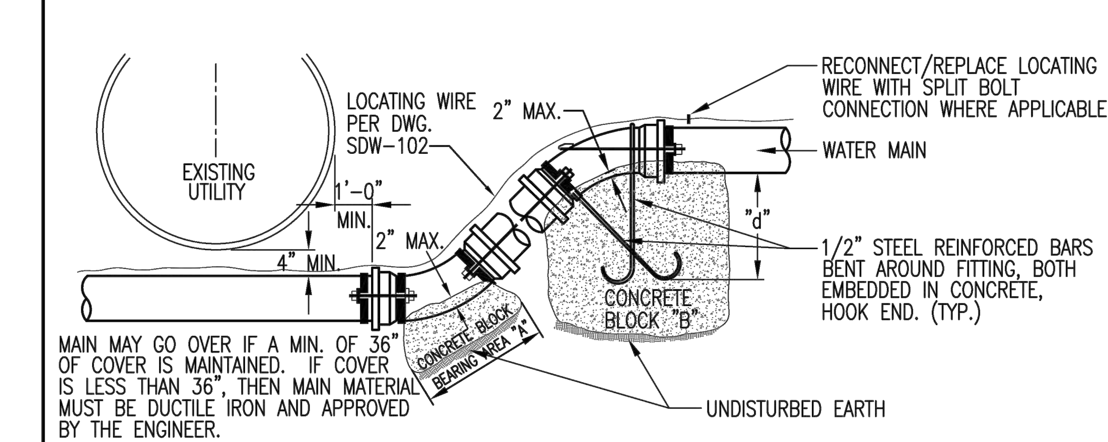

SIZE IN PIPE	6"	8"	12"
MINIMUM DEPTH "d"	6"	8"	20"
YDS. CONCRETE NECESSARY TO PROVIDE WEIGHT, BLOCK "B"	0.8	1-1/3	3
BEARING AREA "A" SQ. FT.	2	3	6.5

NOTE:

1. RESTRAINED JOINTS MAY BE USED IN LIEU OF CONCRETE BLOCKING WITH THE APPROVAL OF THE ENGINEER.
2. FIRE HYDRANTS MUST BE INSTALLED WITH A THRUST BLOCK. RESTRAINED JOINTS ARE NOT ALLOWED.

CHANGES IN MAIN ELEVATION, 6" - 12"

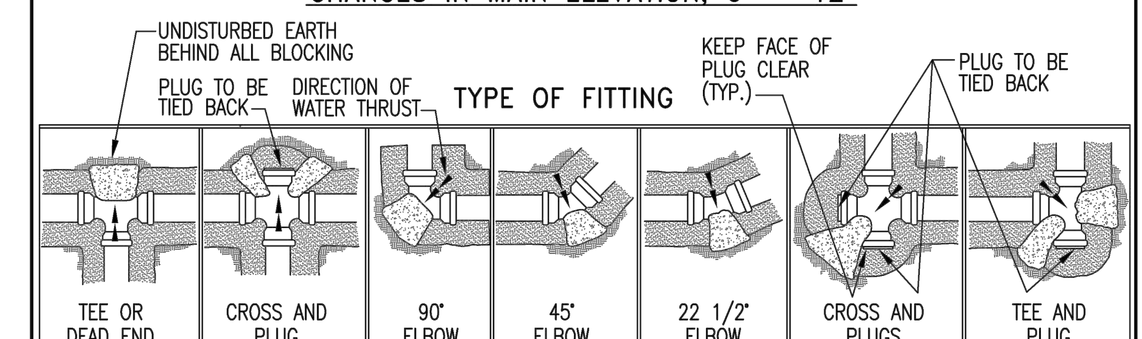

TEE OR DEAD END		CROSS AND PLUG		90° ELBOW		45° ELBOW		22 1/2° ELBOW		CROSS AND PLUGS		TEE AND PLUG	
MAIN SIZE	BEARING AREA	MAIN SIZE	BEARING AREA	MAIN SIZE	BEARING AREA	MAIN SIZE	BEARING AREA	MAIN SIZE	BEARING AREA	MAIN SIZE	BEARING AREA	MAIN SIZE	BEARING AREA
6"	2	6"	3	6"	3	6"	2	6"	1	6"	3	6"	3
8"	3.5	8"	5	8"	5	8"	3	8"	1.5	8"	5	8"	5
12"	8	12"	11.5	12"	11.5	12"	5	12"	3.5	12"	11.5	12"	11.5

NOTES:

1. ABOVE BEARING AREAS BASED ON 150 PSI SERVICE PRESSURE AND 2000 PSF SOIL BEARING CAPACITY. WHERE SOIL CONDITIONS REQUIRE ADJUSTMENT OF ALLOWABLE BEARING PRESSURE, IN THE OPINION OF THE ENGINEER, REQUIRED BLOCKING AREAS WILL BE ADJUSTED.
2. USE CLASS "D" CONCRETE FOR BLOCKING. SEE STANDARD SPECS.
3. VERTICAL CHANGES IN DIRECTION REQUIRE BLOCKING AS SHOWN ABOVE.
4. CONCRETE THRUST BLOCKING SHALL NOT COMPLETELY INUNDATE FITTING.
5. RESTRAINED JOINTS MAY BE USED IN LIEU OF CONCRETE BLOCKING WITH THE APPROVAL OF THE ENGINEER.
6. MAINTAIN 4" MINIMUM CLEARANCE BETWEEN NEW MAIN AND EXISTING UTILITY EXCEPT FOR GAS MAINTAIN 1'-0" CLEARANCE SEE W-106.

R:\Utilstds_New_Std_Details\Water_Utilities\W-103

REV.	DATE	DESCRIPTION

CITY OF SACRAMENTO DEPARTMENT OF UTILITIES — CHANGES IN MAIN ELEVATION & THRUST BLOCKING FOR WATER MAINS — APPR'D BY: [signature] NO SCALE — DATE: SEPT 6, 2017 — DWG. NO. W-103

NO.	REVISION	DATE	BY	APPRV'D

	BY	CHECK
DESIGN	MJW	RFE
DRAWN	DCJ	RFE
QUANT.		

0 1 2 ORIGINAL SCALE IS IN INCHES

REGISTERED PROFESSIONAL ENGINEER — ROBERT F. EYNCK — No. C040666 — Exp. 3-31-25 — 11/13/2023 — CIVIL — STATE OF CALIFORNIA

CWE
2260 Douglas Blvd, Suite 160, Roseville, CA 95661
Ph: 916-772-7800 | www.cwecorp.com

PROPERTY OWNER / DEVELOPER
NERRADSCALI CORPORATION
3960 KINGSBARNS DRIVE
ROSEVILLE, CA 95747
CONTACT: DARREN BROWN
PH: (916) 300-7962
EMAIL: DARRENBBROWN@COMCAST.NET

ON-SITE IMPROVEMENT PLANS FOR
NERRADSCALI SUBDIVISION
SACRAMENTO, CA 95838
APN: 237-0200-092

CONSTRUCTION DETAILS 1

Sheet **C10.1**

11/13/2023

CWE PROJECT NO. 21-188 - 905 NORTH AVENUE, SACRAMENTO, CA 95838

W:\2021 Projects\21-188 905 North Ave Sac\Working CAD\ONSITE C10 & C10.1 CONST DTLS.dwg Nov 13, 2023-09:26 am

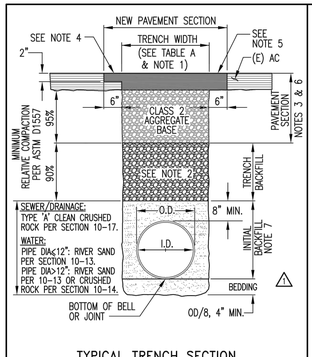

TYPICAL TRENCH SECTION

TABLE A TRENCH WIDTHS			
PIPE TYPE	PIPE I.D.	MINIMUM DIMENSION	MAXIMUM DIMENSION(3)
RIGID(1)	≤12"	PIPE O.D. + 16"	PIPE O.D. + 24"
	>12"	PIPE O.D. + 20"	PIPE O.D. + 36"
FLEXIBLE(2)	ALL	PER ASTM D2321(3) OR THE PIPE MANUFACTURER'S RECOMMENDATIONS, WHICHEVER IS GREATER.	

(1) RIGID PIPE = RCP, VCP & DIP.
(2) FLEXIBLE PIPE = ALL PIPE OTHER △1 THAN RIGID PIPE.
(3) ASTM D2321 STATES THAT THE MINIMUM TRENCH WIDTH SHALL BE EQUAL TO THE PIPE O.D. PLUS 16" OR THE PIPE O.D. TIMES 1.25 PLUS 12", WHICHEVER IS GREATER.
(4) IF THE MAXIMUM DIMENSION AT THE TOP OF THE PIPE IS EXCEEDED, CONTRACTOR SHALL PROVIDE STRONGER PIPE OR IMPROVED BEDDING AND BACKFILL CONDITIONS, AS APPROVED BY THE ENGINEER, TO MEET THE NEW LOADING.

NOTES: △1

1. EXCAVATION, BACKFILL AND RE-PAVING OF TRENCHES SHALL CONFORM TO THE STANDARD SPECIFICATIONS UNLESS OTHERWISE INDICATED BY THE PLANS, PERMIT, SPECIAL PROVISIONS, OR THE ENGINEER.
2. TRENCH BACKFILL SHALL CONSIST OF CLASS 2 AGGREGATE BASE (AB) OR JOB EXCAVATED, NATIVE SOIL. NO ADDITIONAL COMPENSATION SHALL BE PAID FOR STOCKPILING, DRYING, WETTING OR PROCESSING THE NATIVE SOIL OR AB TO MEET THE MINIMUM STABILITY AND RELATIVE COMPACTION CRITERIA.
3. UNLESS OTHERWISE INDICATED IN THE SPECIAL PROVISIONS, THE NEW PERMANENT PAVEMENT SHALL CONFORM TO THE TYPE AND THICKNESS OF THE PAVEMENT REMOVED. IN NO CASE SHALL THE NEW PAVEMENT SECTION BE LESS THAN FOUR INCHES (4") OF AC ON TWELVE INCHES (12") OF CLASS 2 AGGREGATE BASE (AB).
4. EXISTING AC > 4" THICK: GRIND EXISTING AC 2" DEEP AND 6" WIDER THAN TRENCH ON BOTH SIDES. PLACE NEW AC.
5. EXISTING AC ≤ 4" THICK: SAW CUT AND PLACE NEW AC 6" WIDER THAN TRENCH AS SHOWN ON BOTH SIDES.
6. NON-PAVEMENT AREAS: IN NON-PAVEMENT AREAS, THE PAVEMENT SECTION SHALL BE REPLACED WITH JOB EXCAVATED NATIVE SOIL OR OTHER APPROVED BACKFILL COMPACTED TO AT LEAST 90% RELATIVE COMPACTION PER ASTM D1557.
7. SHOVEL SLICE, TAMP, AND/OR VIBRATE MATERIAL UNDER AND AROUND THE PIPE TO A FIRM NON-YIELDING CONDITION TO SATISFACTION OF THE ENGINEER.

REV.	DATE	DESCRIPTION
△1	4/11/12	Changed per Addendum 2
△		
△		

CITY OF SACRAMENTO
DEPARTMENT OF UTILITIES

TRENCH BACKFILL AND RESURFACING

APPR'D BY: NO SCALE
DATE: APRIL 2012 DWG. NO. T - 80

R:\Utilities_New_Std_Details\Fields_Details_O&M\T-80

Addendum #2, Page 41 of 81

8 NTS TRENCH AND BACKFILL DETAIL

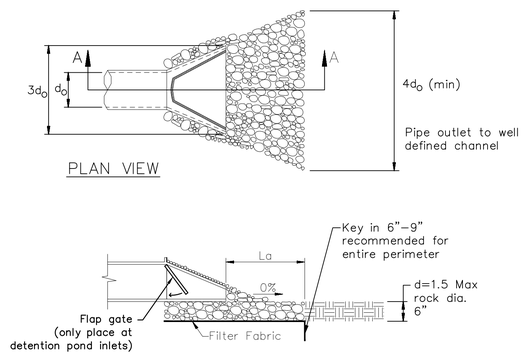

Pipe Diameter (inches)	Discharge (cfs)	Apron Length, L_a (ft)	Rip-Rap D50 Diameter (Min.) (inches)
12	5	10	4
	10	13	6
18	10	10	6
	20	16	8
	30	23	12
	40	26	16
24	30	16	8
	40	26	8
	50	26	12
	60	30	16

7 NTS FLARED END SECTION WITH ROCK SLOPE PROTECTION

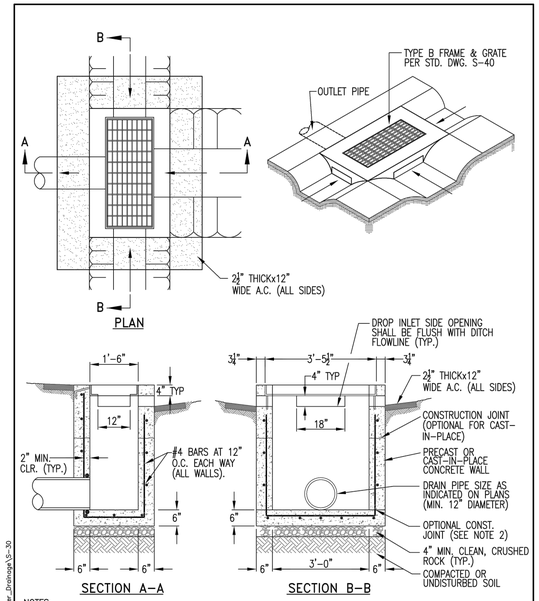

NOTES:

1. THERE SHALL BE A SIDE INLET FACING EACH CHANNEL THAT DISCHARGES TO THE BOX, AND A GRATE COVERED TOP OPENING. MINIMUM OF TWO SIDE INLETS UNLESS OTHERWISE DIRECTED BY THE ENGINEER.
2. CAST -IN- PLACE CONCRETE DRAIN INLETS SHALL CONFORM TO SECTION 20 OF THE STANDARD SPECIFICATIONS. BOTTOM OF INLET SHALL BE PLACED AT SAME TIME AS SIDE WALLS, UNLESS NOTED OTHERWISE.
3. PRECAST DRAIN INLETS TO BE RATED FOR H20 LOADING & SHALL BE APPROVED BY THE ENGINEER.

REV.	DATE	DESCRIPTION
△		
△		
△		

CITY OF SACRAMENTO
DEPARTMENT OF UTILITIES

DITCH BOX

APPR'D BY: NO SCALE
DATE: MAY 2007 DWG. NO. S-30

R:\Utilities_New_Std_Details\Sewer_Drainage\S-30

6 NTS DITCH BOX

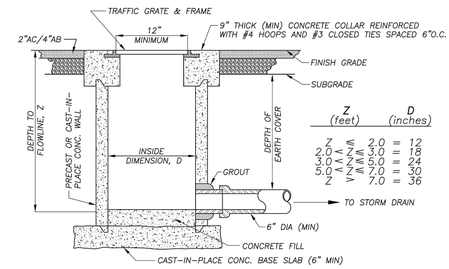

Z (feet)	D (inches)
Z ≤ 2.0	= 12
2.0 < Z ≤ 3.0	= 18
3.0 < Z ≤ 5.0	= 24
5.0 < Z ≤ 7.0	= 30
Z > 7.0	= 36

DRAINAGE INLET (TYPE I)
FOR COLLECTION AND DISCHARGE INTO SEPARATE STORM DRAIN

NOTE:

1. MINIMUM WALL THICKNESS IS 6 INCHES FOR CAST-IN-PLACE CONCRETE.
2. REINFORCE CAST-IN-PLACE CONCRETE WALLS WITH #4 BARS AT 12"O.C. EACH WAY WITH 2" MIN. COVER FROM INSIDE FACE

FIGURE 4

5 NTS DRAIN INLET (TYPE 1) DETAIL

NOTES:

1. USE STANDARD MANHOLE 3A WHEN GREATER THAN 8 FEET DEEP, FOR SANITARY SEWER PIPES LESS THAN 21" DIAMETER AND FOR STORM DRAIN PIPE LESS THAN 27" DIAMETER.
2. MANHOLES SHALL CONFORM TO SEC. 25 OF THE CITY STANDARD SPECIFICATIONS.
3. EXCEPTING PVC, FLOWLINE MATERIAL FOR SEWER MAINS AND INTERSECTING MAINS UP TO 36" DIAMETER SHALL BE VITRIFIED CLAY. IF MANHOLE BASE IS PRECAST CONCRETE OR MANHOLE BASE IS PLACED OVER MAIN WHICH IS 'LAID THROUGH", FLOWLINE MATERIAL SHALL BE SAME AS MAIN.
4. EXCEPTING PVC, FLOWLINE MATERIAL FOR STORM DRAIN PIPE SHALL BE THE SAME AS THE MAIN LINE PIPE WHEN "LAID THROUGH", OR GROUTED TO THE SPRINGLINE MATCHING THE EXISTING PIPE DIAMETER.
5. MANHOLE BENCH SHALL SLOPE UPWARDS FROM THE SPRING-LINE OF THE PIPE TO THE PROJECTED LEVEL OF THE CROWN OF THE PIPE AT THE MANHOLE WALL OR 12 INCHES ABOVE THE SPRING-LINE, WHICHEVER IS LESS.
6. CORE OPENING AND USE "KOR-N-SEAL" OR APPROVED EQUAL FLEXIBLE COUPLINGS ON ALL CONNECTIONS TO MANHOLE EXCEPT IF PIPE IS "LAID THROUGH" AND CAST INTO BASE. IF PIPE IS "LAID THROUGH", CONTRACTOR SHALL PROVIDE WATER STOP WHERE PIPE IS CAST INTO BASE.
7. IF MANHOLE IS PLACED IN NON-PAVED AREA, SEE SECTION 25.
8. PVC IS NOT ALLOWED AS FLOWLINE MATERIAL.

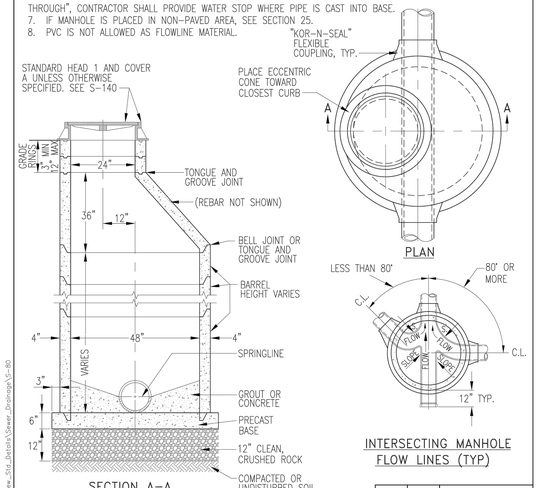

REV.	DATE	DESCRIPTION
△		
△		
△		

CITY OF SACRAMENTO
DEPARTMENT OF UTILITIES

STANDARD MANHOLE
No. 3A

APPR'D BY: NO SCALE
DATE: FEBRUARY 2020 DWG. NO. S-80

R:\Utilities_New_Std_Details\Sewer_Drainage\S-80

4 NTS MANHOLE DETAIL

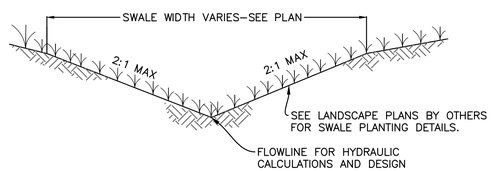

3 NTS VEGETATED SWALE DETAIL

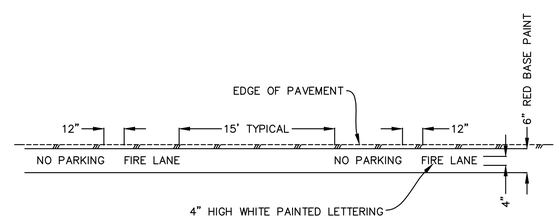

ALL RAISED CURBS IN "NO PARKING" AREAS SHALL BE PAINTED RED WITH ACCEPTABLE RED CURB PAINT AND LETTERED TO THE ABOVE STANDARDS. "LETTERING SHALL BE 4" HIGH, WHITE AND HAVE ¾" STROKE." MARKING TO LOCATED EVERY 15 FEET

2 NTS PAVEMENT MARKINGS FOR FIRE LANES

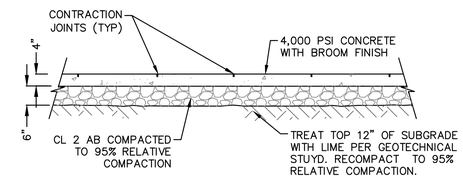

SECTION A - A

NOTE: CONTRACTION JOINT PATTERNS SHOULD DIVIDE PAVEMENTS INTO APPROXIMATELY SQUARES. THE LENGTH OF A PANEL SHOULD NOT BE MORE THAN 25% GREATER THAN ITS WIDTH.

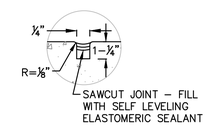

CONTRACTION JOINT

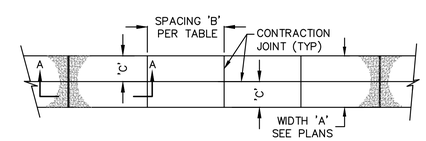

WIDTH 'A'	4'	5'	6'	7'	8'	9'	10'
MAX JOINT SPACING 'B'	5'	5'	5'	6'	8'	5'	5'
MID LONGITUDINAL JOINT 'C'	N/A	N/A	N/A	N/A	N/A	4.5'	5'

PLAN VIEW

1 NTS CONCRETE WALK WITH JOINT SPACING

NO.	REVISION	DATE	BY	APPR'D

BY	CHECK
DESIGN MJW	RFE
DRAWN DCJ	RFE
QUANT.	

0 1 2 ORIGINAL SCALE IS IN INCHES

REGISTERED PROFESSIONAL ENGINEER No. C040666 Exp. 3-31-25 CIVIL STATE OF CALIFORNIA
11/13/2023

CWE
2260 Douglas Blvd. Suite 160, Roseville, CA 95661
Ph: 916-772-1900 | www.cwecorp.com

PROPERTY OWNER / DEVELOPER
NERRADSCALI CORPORATION
3960 KINGSBARNS DRIVE
ROSEVILLE, CA 95747
CONTACT: DARREN BROWN
PH: (916) 300-7962
EMAIL: DARRENBROWN@COMCAST.NET

ON-SITE IMPROVEMENT PLANS FOR
NERRADSCALI SUBDIVISION
SACRAMENTO, CA 95838
APN: 237-0200-092

CONSTRUCTION DETAILS 2

Sheet
C10.2

CWE PROJECT NO. 21-188 – 905 NORTH AVENUE, SACRAMENTO, CA 95838

W:\2021 Projects\21-188 905 North Ave Sac\Working CAD\ONSITE C10 & C10.1 CONST DTLS.dwg Nov 13, 2023-09:26 am

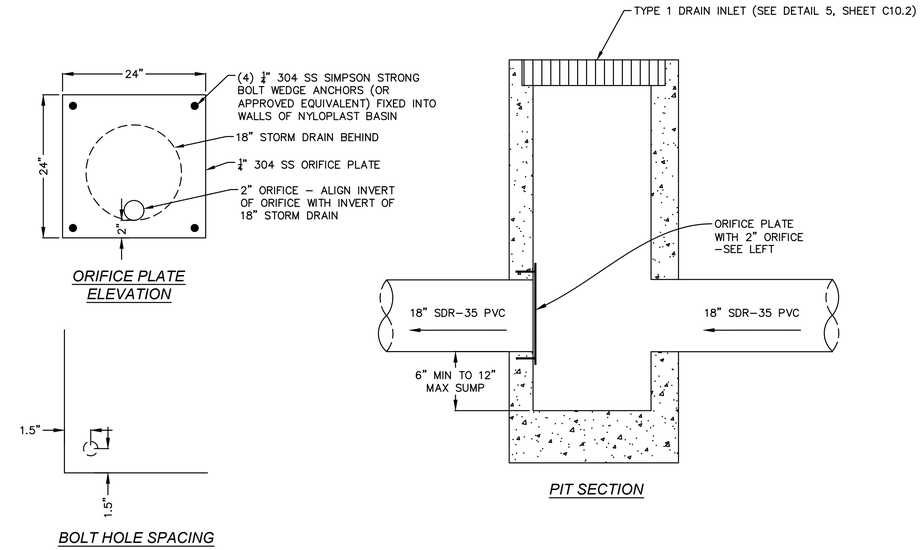

4 NTS ORIFICE DETAIL

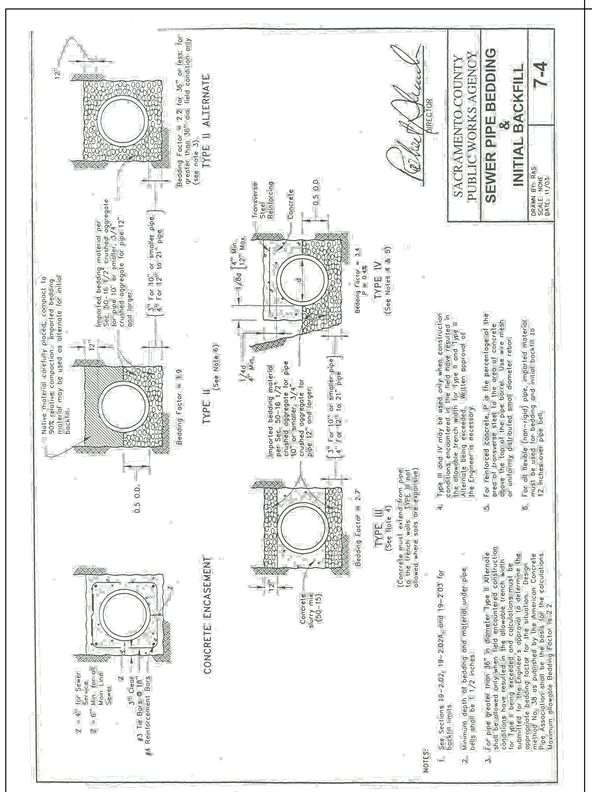

3 NTS SEWER PIPE BEDDING

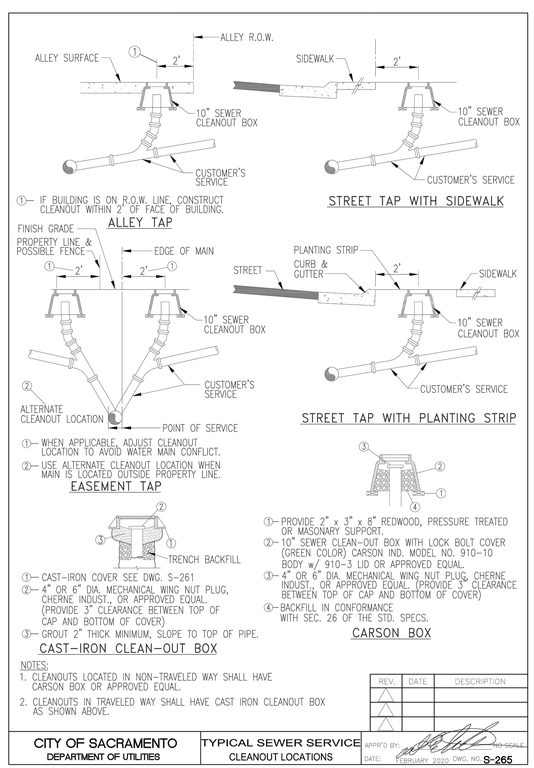

NOTES:
1. CLEANOUTS LOCATED IN NON-TRAVELED WAY SHALL HAVE CARSON BOX OR APPROVED EQUAL.
2. CLEANOUTS IN TRAVELED WAY SHALL HAVE CAST IRON CLEANOUT BOX AS SHOWN ABOVE.

REV.	DATE	DESCRIPTION

CITY OF SACRAMENTO
DEPARTMENT OF UTILITIES
TYPICAL SEWER SERVICE CLEANOUT LOCATIONS
APPR'D BY: NO SCALE
DATE: FEBRUARY 2020 DWG. NO. S-265

2 NTS TYP. SSCO LOCATIONS

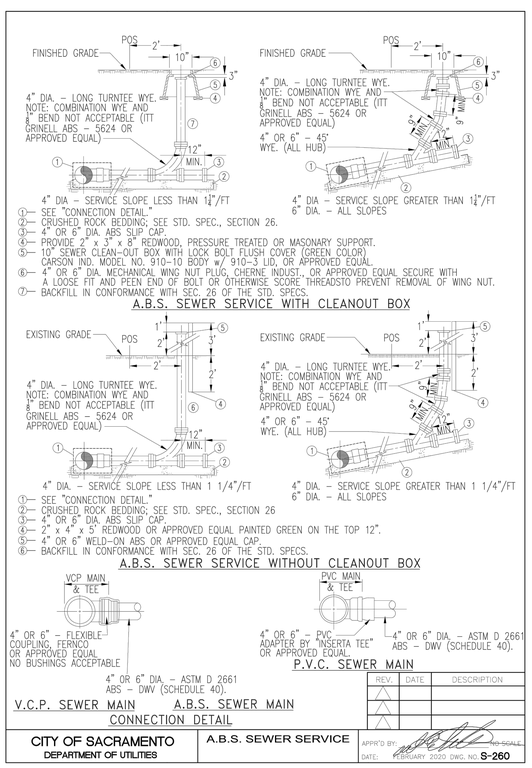

REV.	DATE	DESCRIPTION

CITY OF SACRAMENTO
DEPARTMENT OF UTILITIES
A.B.S. SEWER SERVICE
APPR'D BY: NO SCALE
DATE: FEBRUARY 2020 DWG. NO. S-260

1 NTS ABS SEWER SERVICE

DESIGN	MJW	RFE	
DRAWN	DCJ	RFE	
QUANT.			

ORIGINAL SCALE IS IN INCHES 0 1 2

NO.	REVISION	DATE	BY	APPR'D

REGISTERED PROFESSIONAL ENGINEER ROBERT F. ERCKMAN No. C040666 Exp. 3-31-25 CIVIL STATE OF CALIFORNIA
11/29/2023

CWE
2260 Douglas Blvd, Suite 160, Roseville, CA 95661
Ph: 916-772-7800 | www.cwecorp.com

PROPERTY OWNER / DEVELOPER
NERRADSCALI CORPORATION
3960 KINGSBARNS DRIVE
ROSEVILLE, CA 95747
CONTACT: DARREN BROWN
PH: (916) 300-7962
EMAIL: DARRENBBROWN@COMCAST.NET

ON-SITE IMPROVEMENT PLANS FOR
NERRADSCALI SUBDIVISION
SACRAMENTO, CA 95838
APN: 237-0200-092

CONSTRUCTION DETAILS 3

Sheet
C10.3
14 of 14
11/13/2023

CWE PROJECT NO. 21-188 – 905 NORTH AVENUE, SACRAMENTO, CA 95838

W:\2021 Projects\21-188 905 North Ave Sac\Working CAD\ONSITE C10 & C10.1 CONST DTLS.dwg Nov 29, 2023-03:06 pm

LANDSCAPE GENERAL NOTES

1. CONSTRUCTION DOCUMENTS ARE PART OF THE CONTRACT DOCUMENTS. BY SUBMITTING A BID OR STARTING WORK, THE CONTRACTOR SIGNIFIES UNDERSTANDING AND ACCEPTANCE OF ALL REQUIREMENTS OF THE CONTRACT DOCUMENTS PROVIDED BY THE OWNER/DEVELOPER, INCLUDING BUT NOT LIMITED TO THE GENERAL CONDITIONS, SPECIAL CONDITIONS, PROJECT SPECIFICATIONS, CONSTRUCTION DOCUMENTS AND ANY ADDENDA.
2. THE CONTRACTOR SHALL EXAMINE THE SITE, COMPARE IT WITH THE PLANS, CAREFULLY EXAMINE ALL THE CONTRACT DOCUMENTS AND BECOME SATISFIED AS TO THE CONDITIONS UNDER WHICH THE WORK IS TO BE PERFORMED BEFORE ENTERING INTO THIS CONTRACT. NO ALLOWANCE SHALL SUBSEQUENTLY BE MADE ON BEHALF OF THE CONTRACTOR ON ACCOUNT OF THAT CONTRACTOR'S ERROR, NEGLIGENCE OR FAILURE TO BECOME ACQUAINTED WITH THE CONDITIONS OF THE SITE.
3. THE CONTRACTOR SHALL BE RESPONSIBLE TO VISUALLY INSPECT THE SITE PRIOR TO STARTING THE WORK AND FOR DOCUMENTING DAMAGE TO ANY EXISTING FEATURES. ANY DAMAGE TO THE EXISTING STREETS, SIDEWALKS, ADJACENT PROPERTIES OR ANY EXISTING FEATURES THAT ARE TO REMAIN (INCLUDING BUT NOT LIMITED TO EXISTING PLANT MATERIAL AND UTILITIES) DURING THE CONSTRUCTION OF THIS PROJECT SHALL BE REPAIRED OR REPLACED TO ORIGINAL CONDITIONS BY THE CONTRACTOR AT NO ADDITIONAL COST TO THE OWNER.
4. COMPACTION OF BACKFILL BY JETTING IS NOT PERMITTED UNLESS SPECIFIC REPORTS ARE SUBMITTED BY THE GEOTECHNICAL ENGINEER TO THE ENGINEERING DIVISION STATING THAT COMPACTION OF BACKFILL BY JETTING IS AN ACCEPTABLE METHOD OF COMPACTION FOR THE SOILS ENCOUNTERED.
5. THE CONTRACTOR SHALL PERFORM ALL CLEARING, DEMOLITION, REMOVAL AND SITE PREPARATION NECESSARY FOR THE PROPER EXECUTION OF ALL WORK DESCRIBED WITHIN THIS PLAN SET. ANY ITEMS REQUIRED TO BE REMOVED SHALL BE LEGALLY DISPOSED OF OFF SITE.
6. ALL EXISTING FEATURES AND STRUCTURES NOT SPECIFICALLY NOTED FOR REMOVAL SHALL BE RETAINED AND PROTECTED IN PLACE. ANY EXISTING FEATURES THAT ARE DAMAGED DURING CONSTRUCTION SHALL BE REPLACED TO ORIGINAL CONDITIONS BY THE CONTRACTOR AT NO ADDITIONAL COST TO THE OWNER.
7. THE CONTRACTOR SHALL COMPLETE THE REQUIREMENTS OF THE LOCAL MODEL WATER EFFICIENT LANDSCAPE ORDINANCE AND THE CERTIFICATE OF COMPLETION (REQUIREMENTS ABOVE) UPON COMPLETION OF THE LANDSCAPE IMPROVEMENTS. FAILURE TO SUBMIT THE REQUIRED CERTIFICATES MAY DELAY THE FINAL APPROVAL OF THE LANDSCAPE IMPROVEMENTS AND PROJECT CERTIFICATE OF OCCUPANCY.
8. LANDSCAPE SUBMITTALS (MANUFACTURERS PRODUCT SHEETS) AND MATERIALS SAMPLES SHALL BE PROVIDED PRIOR TO THE START OF THE WORK. LANDSCAPE SUBMITTALS SHALL INCLUDE, AT A MINIMUM, SOIL AMENDMENTS, IRRIGATION COMPONENTS, PLANT LISTS AND MATERIAL SAMPLES. SUBMITTALS SHALL BE PROVIDED A MINIMUM OF 45 DAYS PRIOR TO MATERIAL ORDERING.
9. THE CONTRACTOR IS RESPONSIBLE FOR CONTROLLING DUST DURING THE CONSTRUCTION PERIOD (OR WHENEVER SOIL IS LEFT EXPOSED). ALL DUST CONTROL MEASURES MUST BE IMPLEMENTED AS NECESSARY, INCLUDING DAYS WHEN CONSTRUCTION ACTIVITIES ARE NOT OCCURRING (I.E. WEEKENDS OR HOLIDAYS).
10. CONTRACTOR SHALL BE RESPONSIBLE FOR PROVIDING A MINIMUM 60-DAY MAINTENANCE PERIOD FOR ALL PLANTING AREAS. BEGIN MAINTAINING ALL PLANTINGS IMMEDIATELY UPON INSTALLATION THROUGH COMPLETION OF THE MAINTENANCE PERIOD. THE MAINTENANCE PERIOD SHALL NOT BEGIN UNTIL WRITTEN NOTICE IS PROVIDED TO THE CONTRACTOR BY THE OWNER. THE CONTRACTOR SHALL CONTINUE TO MAINTAIN THE LANDSCAPE BEYOND THE 60-DAY PERIOD UNTIL THE OWNER PROVIDES WRITTEN ACCEPTANCE OF THE WORK. DEAD/DYING PLANTINGS SHALL BE REPLACED BY THE CONTRACTOR AT NOT COST TO THE OWNER DURING THE MAINTENANCE PERIOD.
12. CONTRACTOR IS RESPONSIBLE FOR PROVIDING AN ELECTRICAL CONNECTION IN THE FIELD FOR THE IRRIGATION CONTROLLER. COORDINATE THE ELECTRICAL WORK WITH OTHER TRADES.
13. UNLESS OTHERWISE NOTED, THE CONTRACTOR SHALL PROVIDE AND PAY FOR LABOR, MATERIALS, EQUIPMENT, TOOLS, MACHINERY, UTILITIES, TRANSPORTATION AND OTHER FACILITIES AND SERVICES NECESSARY FOR THE PROPER EXECUTION AND COMPLETION OF THE WORK, WHETHER TEMPORARY OR PERMANENT, AND WHETHER INCORPORATED OR NOT INCORPORATED IN THE WORK.
14. THE CONTRACTOR SHALL SUPERVISE AND DIRECT ALL WORK, INCLUDING COORDINATION OF TRADES. ALL WORK SHALL BE ACCOMPLISHED BY LICENSED CONTRACTORS AND EXPERIENCED WORKERS. THE CONTRACTOR SHALL EMPLOY A SUPERINTENDENT TO SUPERVISE THE WORK ON SITE WHO SHALL BE THE CONTRACTORS REPRESENTATIVE.
15. CONFORM TO ALL APPLICABLE CODES AND ORDINANCES, INCLUDING AIR QUALITY, NOISE AND WORK HOUR REQUIREMENTS.
16. IF ANY HAZARDOUS MATERIALS, BURIAL MARKERS, ARCHEOLOGICAL MATERIALS OR WETLANDS ARE FOUND, CONTRACTOR SHALL SUSPEND WORK IMMEDIATELY AND NOTIFY THE OWNER IN WRITING. WORK SHALL BE SUSPENDED UNTIL THE SIGNIFICANCE OF THE DISCOVERY IS ASSESSED BY A QUALIFIED PROFESSIONAL AND MITIGATION MEASURES ARE APPROVED.
17. DURING PROGRESSION OF THE WORK, THE CONTRACTOR SHALL MAINTAIN A COPY OF THE DRAWINGS ON SITE IN A NEAT AND ORDERLY MANNER, INCLUDING ALL ADDENDA, REQUESTS FOR INFORMATION, SUPPLEMENTAL INFORMATION, APPROVED SUBSTITUTIONS, APPROVED SHOP DRAWINGS, AND OTHER DOCUMENTS AND MARK THIS COPY TO INDICATE FIELD CHANGES AND AS-BUILT CONDITIONS THROUGHOUT THE PROGRESSION OF THE WORK.
18. UNTIL PROJECT ACCEPTANCE, THE CONTRACTOR SHALL BE RESPONSIBLE TO PROTECT AND MAINTAIN THE JOB SITE, INCLUDING ERECTING TEMPORARY FENCING, REMOVING TRASH, SWEEPING AND CLEANING. THE JOB SITE SHALL BE KEPT IN A NEAT AND CLEAN CONDITION AT ALL TIMES. THE CONTRACTOR SHALL BE RESPONSIBLE FOR ALL MATERIALS ON THE JOB SITE AND SHALL REPLACE ANY MATERIALS DAMAGED OR LOST THROUGH THEFT OR OTHER REASONS AT NO ADDITIONAL COST TO THE OWNER.

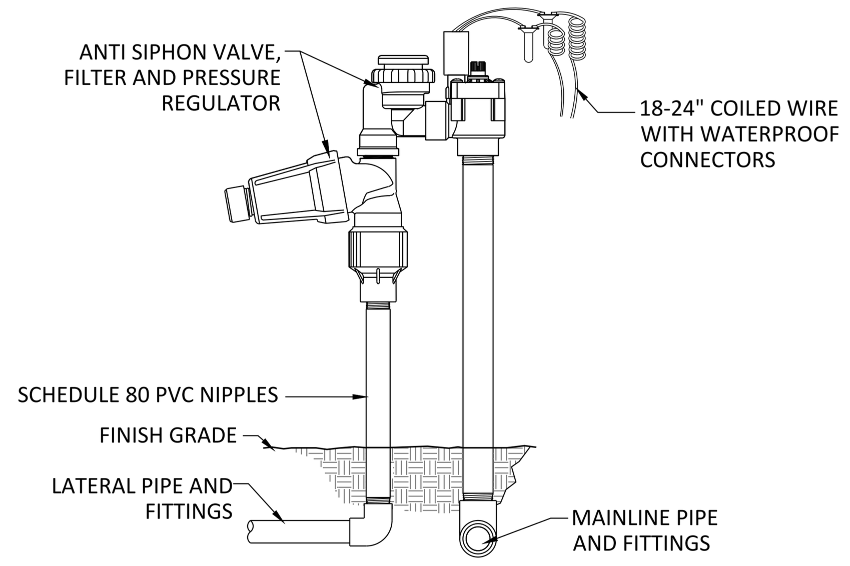

A- REMOTE CONTROL VALVE (DRIP)
NTS

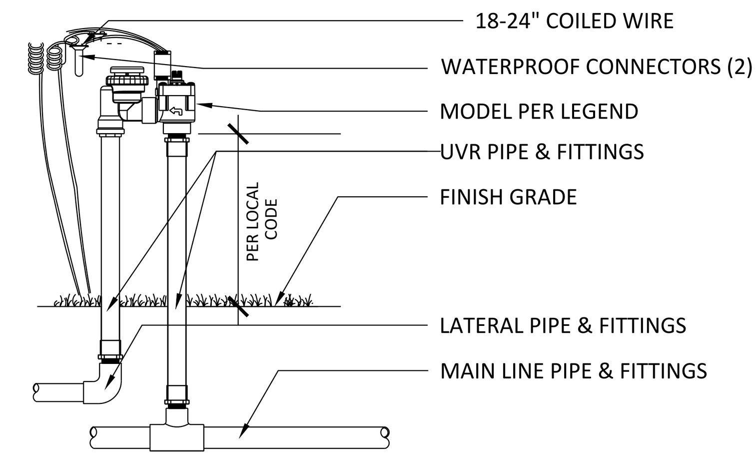

NOTE
ANTI-SIPHON VALVES TO BE INSTALLED A MIN 12" ABOVE THE HIGHEST SPRINKLER HEAD WITHIN THE ZONE, OR, ACCORDING TO LOCAL CODE.

B- REMOTE CONTROL VALVE (SPRAY)
NTS

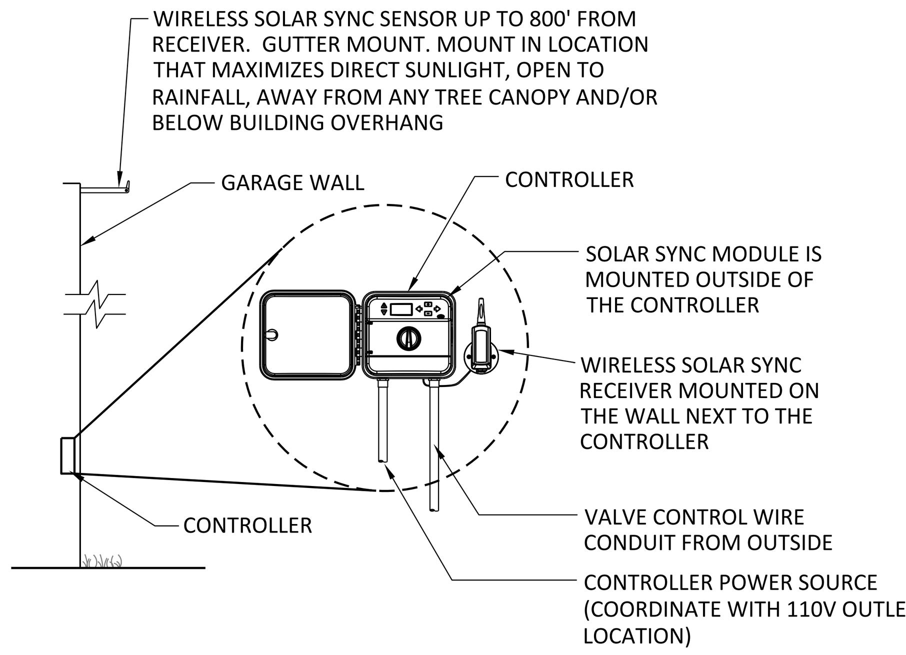

C- IRRIGATION CONTROLLER DETAIL
NTS

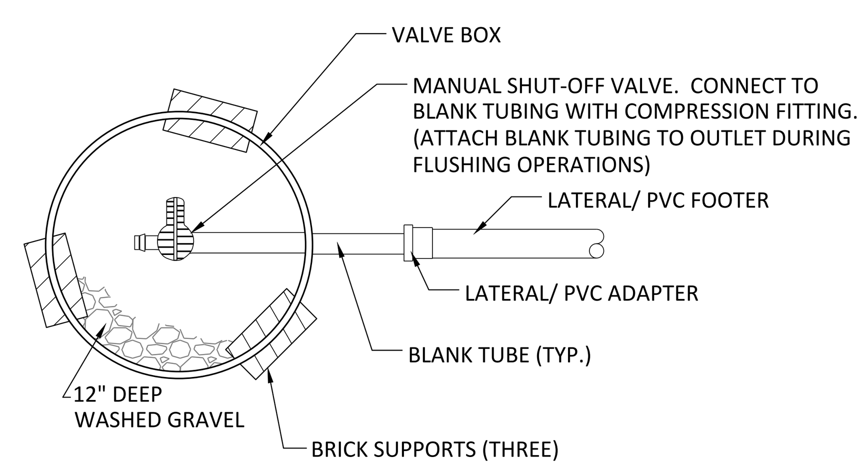

NOTE: INSTALL VALVE BOX WITH BOLT DOWN LID

D- LINE FLUSH VALVE
NTS

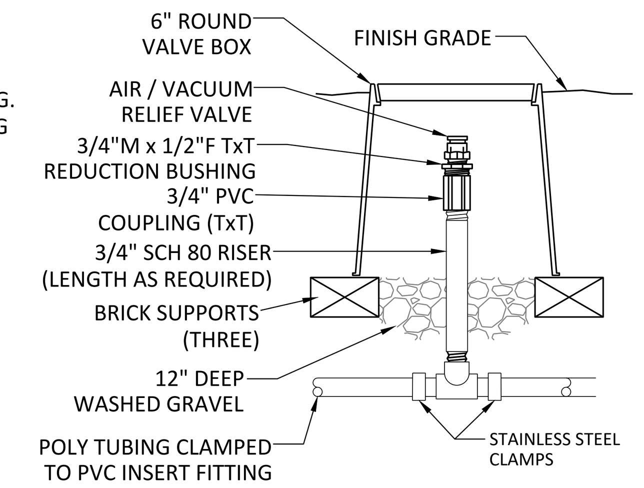

NOTE: INSTALL VALVE BOX WITH BOLT DOWN LID

E- AIR/VACUUM RELIEF
NTS

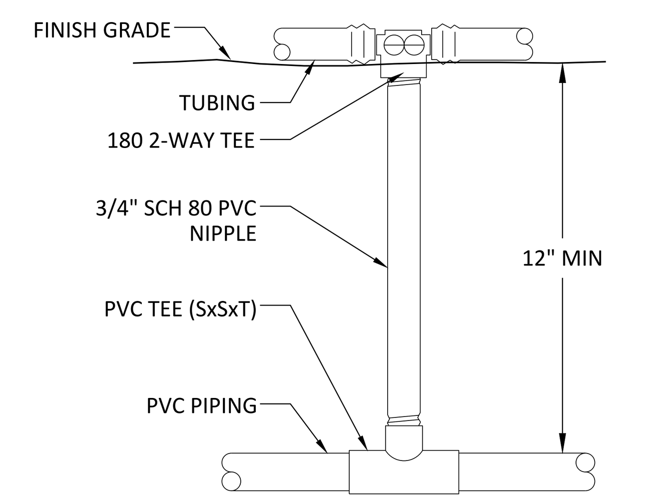

F- STARTER CONNECTION
NTS

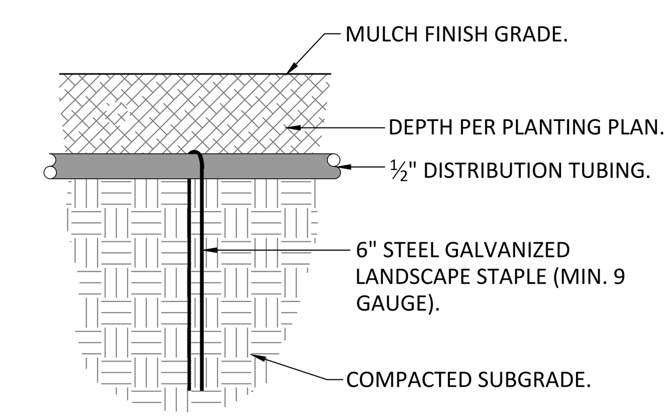

NOTES:
1. LOCATE STAPLES ALONG TUBING AT 36" ON EMITTERS AND AT ALL FITTINGS (TEES, ELLS, ETC.).
2. FULLY COVER DRIPTUBE WITH MULCH.

G-DRIPTUBE STAPLE
NTS

CERTIFICATE OF COMPLETION

This certificate (or City/County Certificate) is to be completed by the applicant/owner upon completion of the landscape project. Contractor to coordinate all requirements with the owner and/or building inspector on required document(s) prior to final inspection. Contractor is responsible to include all minimum documents noted in this sample certificate as part of the landscape scope of work.

PART 1- PROJECT INFORMATION

Project Address and Contact Information

Date	Assessor's Parcel Number	
Project Name	Permit Number	
Name of Applicant	Phone Number	
	Fax Number	
Title	Email Address	
Company	Street Address	
City	State	Zip Code

Property Owner or His/Her Designee

Name of Applicant	Phone Number	
	Fax Number	
Title	Email Address	
Company	Street Address	
City	State	Zip Code

Property Owner

"I/we certify that I/we received copies of all the documents within the landscape documentation package and the certificate of completion and that it is our responsibility to see that the project is maintained in accordance with the landscape and irrigation maintenance schedule."

Property Owner Signature Date

PART 2- CERTIFICATION OF INSTALLATION ACCORDING TO THE LANDSCAPE DOCUMENTATION PACKAGE

"I/we certify that based on periodic site observations, the work has been substantially completed in accordance with the water efficient landscape ordinance and that the landscape planting and irrigation installation conform with the criteria and specifications of the approved landscape documentation package"

Signature*	Date	
Name (print)	Telephone Number	
Title	Phone Number	
	Fax Number	
License Type and Number	Email Address	
Company	Street Address	
City	State	Zip Code

*Owner, owners representative or the installation contractor

PART 3- SAMPLE IRRIGATION SCHEDULE

Irrigation contractor shall prepare an irrigation schedule for the entire project designating irrigation run-times for each zone with days of operation per season (Spring, Summer, Fall and Winter), cycles per day and shall be set per specific site requirements. The final schedule shall consider plant water requirements, sun exposure and water application.

PART 4- SCHEDULE OF LANDSCAPE AND IRRIGATION MAINTENANCE

Contractor to provide a written schedule for site planting and irrigation maintenance as required by the water efficient landscape ordinance, including a landscape waste diversion plan.

PART 5- LANDSCAPE IRRIGATION AUDIT REPORT

Provide an audit of the installed irrigation system conducted by a third party certified landscape irrigation auditor. Irrigation audit shall not be conducted by the person who designed the landscape or installed the landscape.

PART 6- SOIL MANAGEMENT REPORT

Contractor to attach the soils fertility report (per planting notes). Include a statement on contractors company letterhead certifying that all planters were amended per the recommendations of the soil fertility report. Include the certification as part of the certificate of completion.

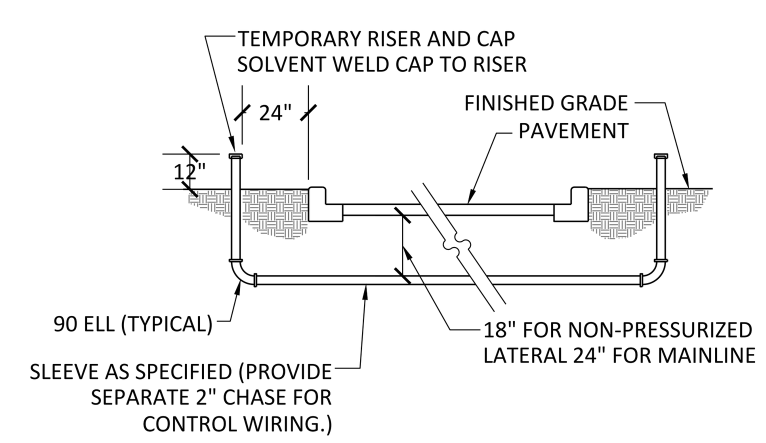

H- SLEEVE INSTALLATION
NTS

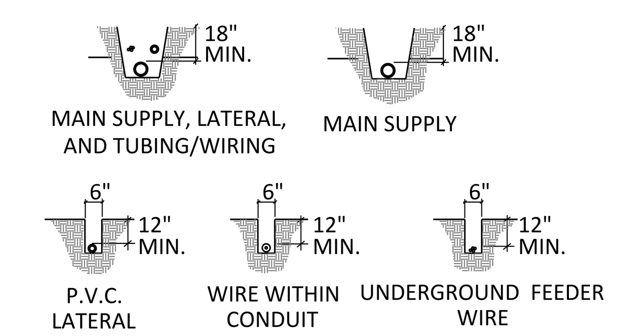

NOTES:
1. ALL P.V.C. PIPING SHALL BE SNAKED IN TRENCHES.
2. ALL WIRING TO BE INSTALLED PER LOCAL CODES.
3. ALL WIRING TO BE BUNDLED AND TAPED AT 10' INTERVALS.
4. ALL MAIN SUPPLY LINES TO BE INSTALLED AS PER MANUFACTURER'S SPECIFICATIONS.
5. PROVIDE PIPE AND WIRE SLEEVING UNDER ALL PAVED SURFACES. WIRE SHALL BE WITHIN SEPARATE 2" ELECTRICAL CHASE.

I- TRENCHING
NTS

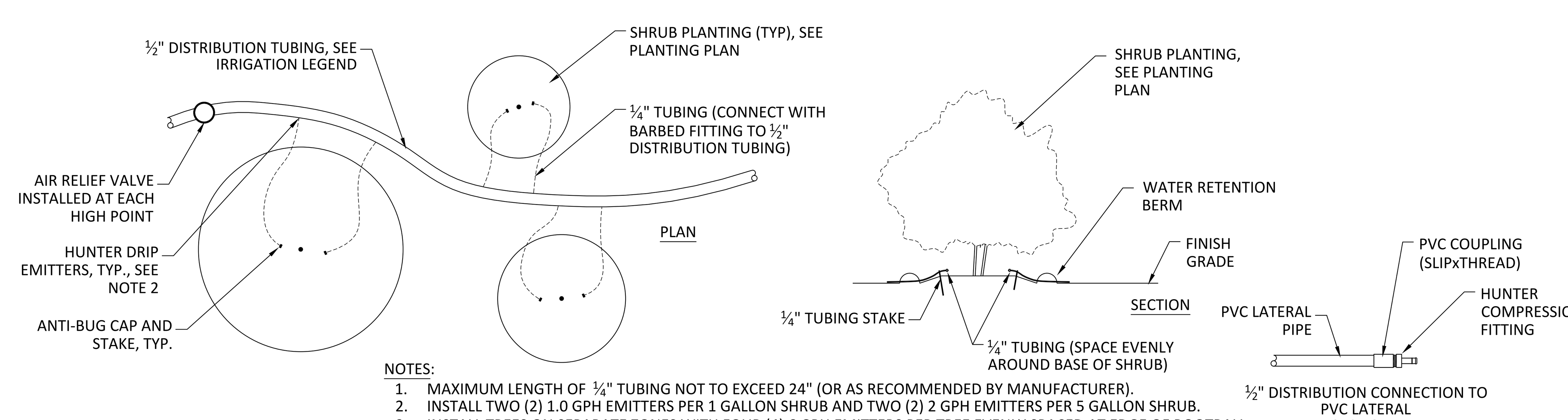

NOTES:
1. MAXIMUM LENGTH OF ¼" TUBING NOT TO EXCEED 24" (OR AS RECOMMENDED BY MANUFACTURER).
2. INSTALL TWO (2) 1.0 GPH EMITTERS PER 1 GALLON SHRUB AND TWO (2) 2 GPH EMITTERS PER 5 GALLON SHRUB.
3. INSTALL TREES ON SEPARATE ZONES WITH FOUR (4) 6 GPH EMITTERS PER TREE EVENLY SPACED AT EDGE OF ROOTBALL.
4. CONNECT 1/2" DISTRIBUTION LINE TO PVC LATERAL PER SECTION ABOVE.
5. INSTALL SOIL STAPLES 36" ON CENTER ALONG THE DISTRIBUTION TUBE AND AT EVERY FITTING.
6. ALL FITTINGS TO BE HUNTER PLD LOC FITTINGS.
7. EMITTERS TO BE HUNTER POINT SOURCE PRESSURE COMPENSATING SELF-PIERCING (MODELS HE-10-B, HE-20-B & HE-60-B). INSTALL WITH DIFFUSER CAPS.

J- POINT SOURCE DRIP TUBE LAYOUT
NTS

MSLA
LANDSCAPE ARCHITECTURE, Inc.
306 Canyon Falls Dr. Folsom, CA 95630
916.989.3372 www.msladesign.com

LICENSED LANDSCAPE ARCHITECT MICHAEL SHULAR No. 4898 Exp. 05.31.25 STATE OF CALIFORNIA

Date: 2/23/2024

Date:	FEBRUARY 23, 2024		
Drawn By:	MS	Checked By:	MS
Scale:	AS NOTED		
Project Number:	107522.001		

REVISIONS

No.	Date	Description	Approval

NORTH AVE. HALF PLEXES
905 NORTH AVENUE
SACRAMENTO, CALIFORNIA 95838
LANDSCAPE NOTES AND DETAILS

L1

C:\Users\MICHAE~1\AppData\Local\Temp\AcPublish_5332\L1_1075_IRR_North_Ave.dwg Feb 23, 2024

IRRIGATION LEGEND

SYMBOL	MANUFACTURER	REMARKS
⊕	1" HUNTER ICV MASTER VALVE	INSTALL PER MANUFACTURERS SPECIFICATIONS.
(FS)	FLOMEC 1" FLOW SENSOR (MODEL QS200-10)	INSTALL PER MANUFACTURERS SPECIFICATIONS.
⊕	AUTOMATIC IRRIGATION CONTROL VALVES: HUNTER ICZ DRIP ZONE CONTROL KIT (DRIP) HUNTER ICV VALVES (TREE BUBBLERS)	INSTALL PER MANUFACTURERS SPECIFICATIONS. SIZE PER PLAN. ADJUST/TUNE VALVES AS REQUIRED TO ENSURE PROPER WATER DISTRIBUTION TO ALL PLANTER AREAS.
⋈	NIBCO T-113 GATE VALVE	LINE SIZE
C	HUNTER I-CORE 9-STATION GRAY METAL PEDESTAL CONTROLLER. (COORDINATE FINAL LOCATION WITH OWNER).	PROVIDE 110V ELECTRICAL CONNECTION IN FIELD TO CONTROLLER LOCATION AS SHOWN AND AS APPROVED BY OWNER PRIOR TO INSTALLATION.
NOT SHOWN	HUNTER SOLAR SYNC (WIRELESS SENSOR WITH MOUNTING ARM, DIGITAL MODULE AND RECEIVER)	INSTALL PER MANUFACTURERS SPECIFICATIONS.
NOT SHOWN	SLEEVING AND CONDUIT LOCATIONS FOR IRRIGATION LINE AND CONTROL WIRE CROSSINGS. INSTALL SLEEVES TO BE 2X THE SIZE OF THE PIPE TO BE SLEEVED AND CONDUIT AS REQUIRED FOR CONTROL WIRE (MIN. 1" DIA.)	COORDINATE WITH SITE DEVELOPMENT PLANS AND OTHER TRADES. SLEEVE EVERY CROSSING AND NOT LOCATIONS ON IRRIGATION AS-BUILTS.
	HUNTER PLD BLANK TUBE DRIP LINES (NON-PRESSURE)	INSTALL PER POINT SOURCE DRIP DETAIL I/SHEET L1.
	CLASS 200 PVC LATERAL LINES (NON-PRESSURE)	INSTALL PER IRRIGATION DETAILS. SIZE PER PLAN.
	PIPE-HOP LOCATIONS	GRAPHIC TO DENOTE SEPARATION OF ZONES.
	1" SCHEDULE 40 PVC IRRIGATION MAINLINE. ACTUAL LOCATION SHALL BE LOCATED WITHIN PLANTER AREAS.	IRRIGATION MAINLINE SHOWN UNDER PAVED AREAS FOR PLAN CLARITY ONLY.

SPRINKLERS-

SYMBOL/ PATTERN*	MFG	MODEL NUMBER	RADIUS/ PATTERN	GPM	PRESSURE
②	HUNTER	PRS30-06-CV WITH MP2000 ADJUSTABLE ARC NOZZLE	13'-17'	.38-1.25	30 PSI
①	HUNTER	PRS30-06-CV WITH MP2000 ADJUSTABLE ARC NOZZLE	8'-12'	.17-.34	30 PSI

*SYMBOL/PATTERN SHOWN FOR MP ROTATOR NOZZLES ARE DIAGRAMATICAL. CONTRACTOR IS RESPONSIBLE FOR SELECTION OF NOZZLE PATTERN (QUARTER, HALF, FULL, ETC) AND ADJUSTING SPRAY ARC TO MINIMIZE OVERSPRAY ONTO ADJACENT AREAS.

NOTES:
1. FULL CIRCLE SPRAY NOZZLES SHALL BE 360" FIXED PATTERN.
2. INSTALL SPRINKLER BODIES WITH FACTORY INSTALLED CHECK VALVES TO PREVENT LOW HEAD DRAINAGE.
3. INSTALL PER DETAIL C, SHEET L1.

LOT IRRIGATION ZONES

LOT 1
1. 73 SF, TREES, DRIP
2. 438 SF, SHRUBS, DRIP
3. 73 SF, LAWN (.68 GPM)

LOT 2
1. 73 SF, TREES, DRIP
2. 66 SF, LAWN (.68 GPM)
3. 365 SF, SHRUBS, DRIP

LOT 3
1. 180 SF, TREES, DRIP

LOT 4
1. 450 SF, TREES, DRIP

LOT 5
1. 821 SF, LAWN (5.44 GPM)
2. 674 SF, SHRUBS, DRIP
3. 882 SF, SHRUBS, DRIP
4. 1425 SF, SHRUBS, DRIP
5. 1392 SF, SHRUBS, DRIP
6. 180 SF, TREES, DRIP

LOT 6
1. 643 SF, LAWN (5.08 GPM)
2. 669 SF, SHRUBS, DRIP
3. 376 SF, TREES, DRIP
4. 718 SF, SHRUBS, DRIP
5. 1129 SF, SHRUBS, DRIP
6. 493 SF, SHRUBS, DRIP

LOT 7
1. 454 SF, SHRUBS, DRIP
2. 90 SF, TREES, DRIP
3. 1059 SF, SHRUBS, DRIP
4. 338 SF, LAWN (2.81 GPM)

LOT 8
1. 839 SF, SHRUBS, DRIP
2. 360 SF, TREES, DRIP
3. 909 SF, SHRUBS, DRIP
4. 250 SF, LAWN (2.04 GPM)
5. 455 SF, SHRUBS, DRIP

TREE ZONES NOTE

INSTALL SINGLE ZONE FOR ALL TREES PER LOT. LATERAL LINES AND DRIP LINES FOR TREE ZONES NOT SHOWN FOR PLAN CLARITY. FIELD LOCATE AND INSTALL LATERAL AND DRIP LINES/EMITTERS AS NECESSARY TO PROVIDE DRIP IRRIGATION TO EACH TREE.

WATER EFFICIENT LANDSCAPE WORKSHEET

Project: **North Ave Half Plexes**
905 North Avenue
Sacramento California

Maximum Applied Water Allowance (MAWA)

Area 17,057 ETAF: 0.55 Project Type: Residential
ETo 51.9 Station: Sactamento SLA: 0

MAWA = (ETo) (0.62) [(ETAF x LA) + [(1-ETAF) x SLA]

301,873 Gallons Per Year

Hydrozone/ Planting Description	Plant Water Use	Plant Factor (PF)	Irrigation Method	Irrigation Efficiency	ETAF (PF/IE)	Hydrozone Area (HA) (square feet)	ETAF X Area	Estimated Total Water Use
Onsite Landscape Areas								
Turf	High	0.7	Spray	0.75	0.93	2,199	2,052	66,042
Trees	Low	0.2	Drip	0.81	0.25	1,782	440	14,158
Shrubs	Low	0.2	Drip	0.81	0.25	10,174	2,512	80,834
Shrubs	Med	0.4	Drip	0.81	0.49	1,797	887	28,555
				Area Total		15,952	5,892	
Offsite Landscape Areas								
Trees	Med	0.4	Drip	0.81	0.49	376	186	5,975
Shrubs	Low	0.2	Drip	0.81	0.25	729	180	5,792
				Area Total		1,105	366	
Special Landscape Areas								
1					1	0	0	0
2					1	0	0	0
				Area Total		0	0	
							ETWU Total	201,357
							MAWA	301,873

MWELO NOTE

INSTALLATION OF HUNTER I-CORE CONTROLLER WITH SOLAR SYNC AND FLOW SENSOR SATISFIES MWELO REQUIREMENTS FOR SMART CONTROLLER AND IRRIGATION SUB-METER WITH REAL TIME FLOW MONITORING CAPABILITIES.

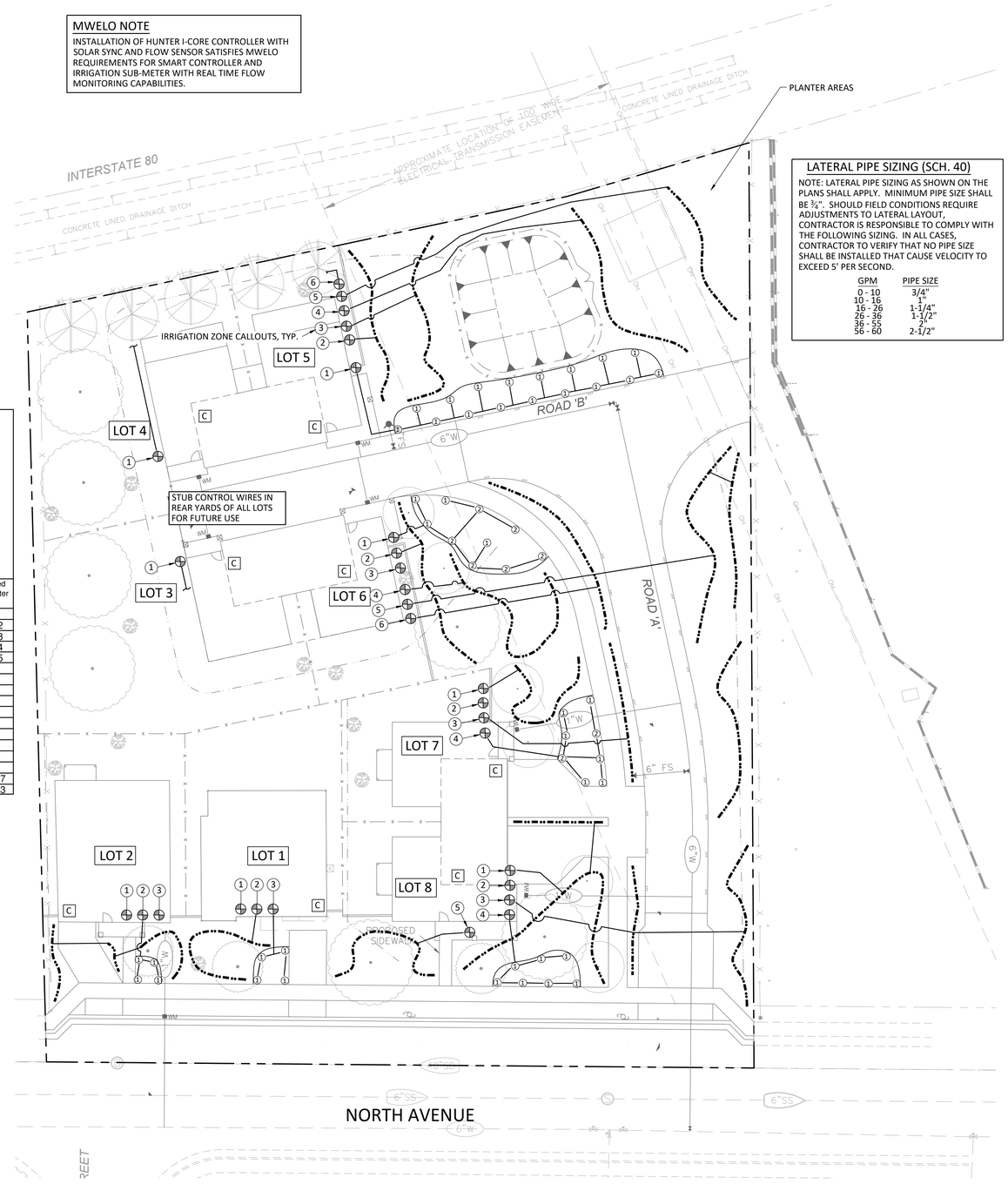

LATERAL PIPE SIZING (SCH. 40)

NOTE: LATERAL PIPE SIZING AS SHOWN ON THE PLANS SHALL APPLY. MINIMUM PIPE SIZE SHALL BE ¾". SHOULD FIELD CONDITIONS REQUIRE ADJUSTMENTS TO LATERAL LAYOUT, CONTRACTOR IS RESPONSIBLE TO COMPLY WITH THE FOLLOWING SIZING. IN ALL CASES, CONTRACTOR TO VERIFY THAT NO PIPE SIZE SHALL BE INSTALLED THAT CAUSE VELOCITY TO EXCEED 5' PER SECOND.

GPM	PIPE SIZE
0 - 10	3/4"
10 - 16	1"
16 - 26	1-1/4"
26 - 36	1-1/2"
36 - 55	2"
56 - 60	2-1/2"

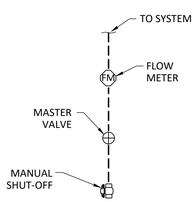

NOTES:
1. CONNECT TO STUB IN PLANTER AFTER BACKFLOW PREVENTER AND RUN PRESSURE MAINLINE WHERE INDICATED ON THE PLANS. (SEE CIVIL PLANS FOR EXACT POINT OF CONNECTION LOCATION AND FURTHER INFORMATION).
2. THIS SYSTEM IS DESIGNED FOR A MAXIMUM FLOW OF 10 GPM AND A MINIMUM FLOW OF .22 GPM WITH A MINIMUM STATIC PRESSURE OF 55 PSI AT THE POINT OF CONNECTION.
3. CONTRACTOR MUST PERFORM A STATIC WATER PRESSURE TEST TO CONFIRM WATER PRESSURE AND NOTIFY LANDSCAPE ARCHITECT IF THE PRESSURE DIFFERS MORE THAN 10% THAN THE DESIGN PRESSURE OF 55 PSI.
4. INSTALL FLOW METER PER MINIMUM REQUIRED PIPE OFFSETS AND MANUFACTURERS SPECIFICATIONS.
5. INSTALL MASTER VALVE AND FLOW METER IN SEPARATE VALVE BOXES.
6. CONNECT CONTROL WIRES FOR THE MASTER VALVE AND FLOW METERS TO PORTS N THE CONTROLLER.

ENLARGEMENT

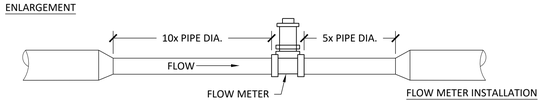

A- IRRIGATION CONNECTION ENLARGEMENT
NTS

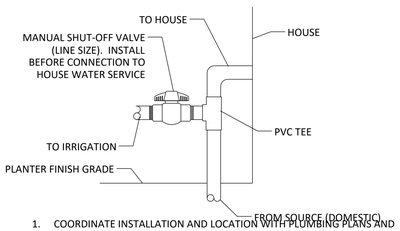

1. COORDINATE INSTALLATION AND LOCATION WITH PLUMBING PLANS AND INSTALL MANUAL SHUT-OFF VALVE FOR EACH LOT.
2. STUB PIPE IN REAR YARDS FOR EACH LOT (INCLUDING LOTS 3 & 4).

B-IRRIGATION CONNECTION
NTS

IRRIGATION COMPLIANCE STATEMENT:

I HAVE COMPLIED WITH THE CRITERIA OF THE WATER EFFICIENT ORDINANCE AND APPLIED THEM ACCORDINGLY FOR THE EFFICIENT USE OF WATER IN THE LANDSCAPE DESIGN PLAN.

SIGNED 2/23/2024 DATE

0' 10' 20' 40'
SCALE: 1"=20'-0"

MSLA
LANDSCAPE ARCHITECTURE, Inc.
306 Canyon Falls Dr. Folsom, CA 95630
916.983.5372 www.msladesign.com

LICENSED LANDSCAPE ARCHITECT MICHAEL SHIRMOHAMMADI No. 5332 STATE OF CALIFORNIA

Date: 2/23/2024

Date: FEBRUARY 23, 2024
Drawn By: MS
Checked By: MS
Scale: AS NOTED
Project Number: 107522.001

REVISIONS

No.	Date	Description

Approval

NORTH AVE. HALF PLEXES
905 NORTH AVENUE
SACRAMENTO, CALIFORNIA 95838
IRRIGATION PLAN

L2

Sheet 2 of 4

C:\Users\MICHAE~1\AppData\Local\Temp\AcPublish_5332\L1_1075_IRR_North_Ave.dwg Feb 23, 2024

PLANTING NOTES

1. PLANTING SHALL CONFORM TO LOCAL REQUIREMENTS FOR LANDSCAPE SITE DEVELOPMENT.
2. PROVIDE MINIMUM SLOPE OF 1-1/2% FOR POSITIVE DRAINAGE AWAY FROM CENTER IN ALL PLANTED AREAS.
3. THE PLANT QUANTITIES SHOWN ON THE DRAWINGS ARE INFORMATIONAL ONLY. THE CONTRACTOR IS RESPONSIBLE FOR FINAL QUANTITIES REQUIRED TO COMPLETE THE WORK. IN CASE OF DISCREPANCY, THE PLAN SHALL GOVERN.
4. ALL TREES SHALL BE PLANTED A MINIMUM OF 5' FROM UNDERGROUND UTILITIES.
5. ALL EXISTING TREES TO REMAIN SHALL BE PROTECTED FROM DAMAGE AT ALL TIMES. DO NOT STORE CONSTRUCTION EQUIPMENT BELOW THE CANOPY OF ANY TREES TO REMAIN. DAMAGE TO ANY EXISTING TREES OR PLANT MATERIAL TO REMAIN SHALL BE REPLACED BACK TO ORIGINAL CONDITIONS AT NO ADDITIONAL COST TO THE OWNER.
6. IMMEDIATELY AFTER AWARD OF CONTRACT, THE CONTRACTOR SHALL NOTIFY THE LANDSCAPE ARCHITECT IF SPECIFIED PLANT MATERIAL IS AVAILABLE FROM COMMERCIAL NURSERIES. IN THE EVENT THAT A PLANT IS NOT AVAILABLE, THE CONTRACTOR SHALL PROVIDE ALTERNATE PLANT MATERIAL SELECTIONS COMPARABLE TO THE ORIGINAL SPECIFIED SPECIES. SUCH CHANGES WILL NOT ALTER THE CONTRACTOR'S ORIGINAL BID PRICE UNLESS A CREDIT IS DUE TO THE OWNER. CONTRACTOR TO SOURCE MULTIPLE NURSERIES WHEN ORDERING PLANT MATERIAL.
7. THE CONTRACTOR SHALL ENSURE THAT ALL EXCAVATED PLANT PITS HAVE POSITIVE DRAINAGE. PLANT PITS SHALL BE FULLY FILLED WITH WATER AND SHALL DRAIN WITHIN ONE (1) HOUR OF FILLING. THE CONTRACTOR SHALL EXCAVATE THROUGH ANY IMPERVIOUS LAYER IF ENCOUNTERED.
8. ALL PLANT MATERIAL SHALL COMPLY WITH ANSI Z601 'STANDARD FOR NURSERY STOCK' AND MEET THE MINIMUM SIZES:

SHRUBS/GROUNDCOVER	HEIGHT	SPREAD
1 GAL.	9-11"	6-8"
5 GAL.	18-24"	15-18"
15 GAL.	36-42"	36-42"

TREES	HEIGHT	SPREAD	CALIPER
15 GAL.	8'-11'	30-36"	1"- 1-1/4"

9. TREE ROOTS SHALL BE VISUALLY INSPECTED IN CONTAINERS PRIOR TO PLANTING. CONTRACTOR SHALL CONFIRM THAT NO CIRCLING ROOTS ARE LOCATED WITHIN THE TOP SOIL OF THE CONTAINER.
10. ROOT BARRIERS SHALL BE PROVIDED FOR ALL TREES WITHIN 10' OF ANY CURB AND/OR HARDSCAPE PAVEMENT.
11. ALL PLANTER AREAS (AND/OR AREAS NOTED) SHALL RECEIVE A 3" LAYER OF BARK MULCH.
12. THE CONTRACTOR SHALL PROVIDE A SOILS REPORT PREPARED BY A QUALIFIED SOILS SPECIALIST AND SUBMIT TO THE OWNER FOR FINAL APPROVAL. SOILS SAMPLES SHALL BE COLLECTED AFTER ROUGH GRADING OPERATIONS AND PRIOR TO THE INSTALLATION OF PLANT MATERIAL. SOIL SAMPLES SHALL BE SUFFICIENTLY NUMEROUS TO ACCOUNT FOR ANY SOIL VARIATIONS THAT MAY BE PRESENT ON THE SITE. THE FOLLOWING MINIMUM ITEMS SHALL BE INCLUDED IN THE ANALYSIS:
    A. INFILTRATION RATE.
    B. SOIL TEXTURE.
    C. CATION EXCHANGE CAPACITY.
    D. SOIL FERTILITY INCLUDING TESTS FOR NITROGEN, POTASSIUM, PHOSPHOROUS, PH, ORGANIC MATTER AND SPECIFIC CONDUCTANCE (E.C.).
13. PRIOR TO PLANTING, SOIL AMENDMENTS SHALL BE ADDED PER RECOMMENDATIONS OF THE SOILS REPORT. REPORT AND AMENDMENTS SHOWN ON THE PLAN ARE FOR BIDDING INFORMATION ONLY. CONTRACTOR SHALL ACCOUNT FOR SOIL AMENDMENTS IN FINAL BID. THE RESULTS OF THE SOILS TESTS THE CONTRACTOR PERFORMS SHALL DETERMINE ACTUAL AMENDMENTS TO BE INSTALLED AND SHALL NOT ALTER FINAL BID TO OWNER.
14. ANY LAWN AREAS SHALL BE BID AS SOD UNLESS OTHERWISE SPECIFIED. CONTRACTOR SHALL MAKE SCHEDULING PROVISIONS TO ASSURE THAT ALL SOD IS INSTALLED PRIOR TO OCTOBER 1. ANY LAWN INSTALLED AFTER OCTOBER 1 SHALL BE SUBJECT TO AN EXTENDED ESTABLISHMENT PERIOD (MINIMUM 6 MONTHS) TO GUARANTEE PROPER ESTABLISHMENT.
15. SOD AREAS TO BE PREPPED WITH A MIN 3" AMENDED SOIL. AMENDMENTS TO BE INSTALLED PER THE RECOMMENDATIONS OF THE SOILS REPORT.
16. CONTRACTOR RESPONSIBLE FOR EROSION AND SEDIMENT CONTROL AT ALL TIMES. EROSION AND SEDIMENT CONTROL MEASURES SHALL BE MAINTAINED UNTIL DISTURBED AREAS ARE STABILIZED. ALL EROSION AND SEDIMENT CONTROL MEASURES SHALL BE CHECKED BEFORE AND AFTER ALL STORMS TO ENSURE ALL MEASURES ARE FUNCTIONING PROPERLY.
17. ALL AREAS THAT ARE EXPOSED SHALL BE PLANTED WITH HYDROSEED MIX. NO AREAS SHALL BE LEFT EXPOSED DURING THE WINTER MONTHS. EXPOSED SURFACES SHALL HAVE EROSION CONTROL MEASURES IN PLACE PRIOR TO OCTOBER 1.
18. ALL SEDIMENT DEPOSITED ON PAVED ROADWAYS, HARDSCAPES, SIDEWALKS OR OTHER NON-PLANTER AREAS SHALL BE SWEPT AT THE END OF EACH WORKING DAY.
19. CONTRACTOR SHALL ADHERE TO THE REQUIREMENTS OF THE CIVIL EROSION CONTROL PLAN AND/OR THE STORM WATER POLLUTION PREVENTION PLAN (SWPPP) IN ADDITION TO THESE MINIMUM REQUIREMENTS (AS APPLICABLE).
20. ALL PLANTER AREAS TO BE FREE FROM DEBRIS, TRASH, CONSTRUCTION MATERIAL, WOOD, ETC WITHIN THE TOP 6" OF THE SOIL. SOIL SHALL BE FREE FROM STONES GREATER THAN 1" IN DIAMETER WITHIN THE TOP 6" OF SOIL PROFILE.

LANDSCAPE COMPLIANCE STATEMENT:

I HAVE COMPLIED WITH THE CRITERIA OF THE WATER EFFICIENT ORDINANCE AND APPLIED THEM ACCORDINGLY FOR THE EFFICIENT USE OF WATER IN THE LANDSCAPE DESIGN PLAN.

SIGNED — DATE 2/23/2024

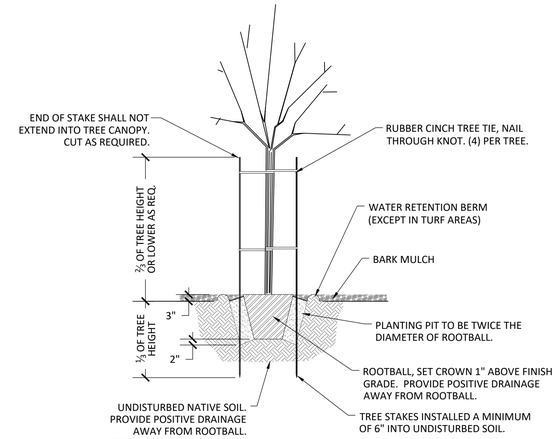

NOTES:
1. INSTALL A BLEND OF NATIVE SOIL AND AMENDED SOIL PER RECOMMENDATIONS OF SOILS REPORT AS BACKFILL.
2. SCARIFY EDGES OF EXCAVATED TREE PIT TO MINIMUM DEPTHS TO CREATE AND UNEVEN SOIL TRANSITION BETWEEN BACKFILL MATERIAL AND UNDISTURBED NATIVE SOIL..

A- TREE PLANTING DETAIL
NTS

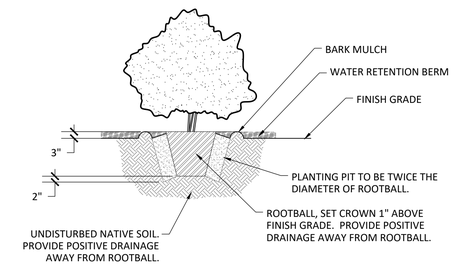

B- SHRUB PLANTING DETAIL
NTS

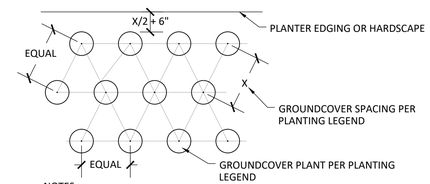

NOTES:
1. INSTALL GROUNDGOVER IN A TRIANGULAR PATTERN.
2. REFER TO PLANTING PLANS AND PLANTING LEGEND FOR FURTHER INFORMATION.

C- GROUNDCOVER SPACING DETAIL
NTS

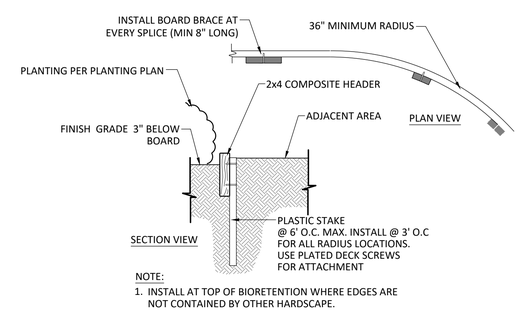

NOTE:
1. INSTALL AT TOP OF BIORETENTION WHERE EDGES ARE NOT CONTAINED BY OTHER HARDSCAPE.

D- LANDSCAPE EDGING
NTS

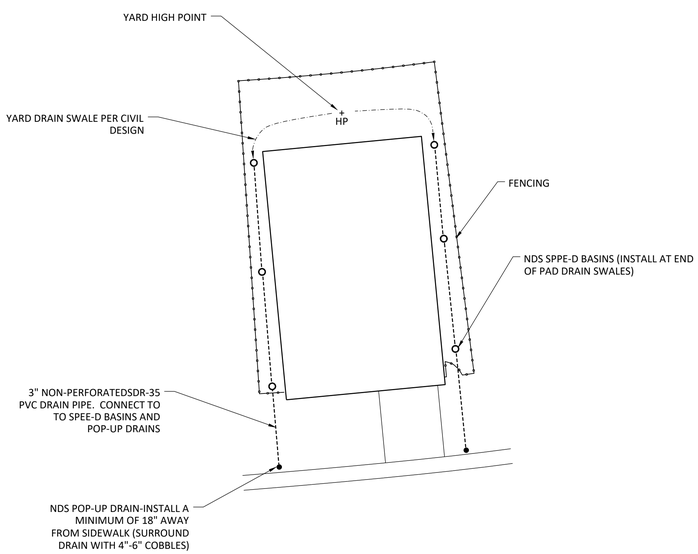

NOTES:
1. CONTRACTOR SHALL BE RESPONSIBLE FOR PROPER SURFACE DRAINAGE TO DRAIN INLETS. FINE GRADE AS NECESSARY TO PROVIDE POSITIVE SLOPE TO DRAINS AT THE END RUN OF PAD SWALES.
2. ADJUST FINAL LOCATION OF ALL BASINS, POP-UP DRAINS, PIPE, ETC. AS NECESSARY TO AVOID ANY SITE FEATURES NOT SPECIFICALLY SHOWN ON THE PLANS. CONTRACTOR IS RESPONSIBLE FOR MINOR FIELD ADJUSTMENTS TO ACCOUNT FOR SITE SPECIFIC FEATURES TO ENSURE POSITIVE FLOW AND PROPER DRAINAGE.
3. ALL DRAINAGE COMPONENTS SHALL BE FREE OF DEBRIS TO ENSURE POSITIVE FLOW. MINIMUM PIPE SLOPE TO BE .5%.
4. INSTALL ALL COMPONENTS PER MANUFACTURERS SPECIFICATIONS.
5. PAD GRADING TO BE PERFORMED PER CIVIL GRADING PLANS. COORDINATE ALL WORK AND GRADES WITH CIVIL PLANS.
6. FIELD LOCATE AND CONNECT DOWNSPOUTS ON SIDE YARDS TO DRAINAGE SYSTEM.

TYPICAL LOT DRAINAGE

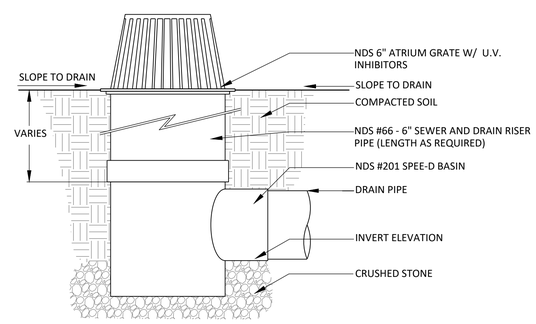

E- SPEE-D NDS ROUND AREA DRAIN
NTS

MSLA
LANDSCAPE ARCHITECTURE, Inc.
306 Canyon Falls Dr., Folsom, CA 95630
916.983.3372 www.msladesign.com

LICENSED LANDSCAPE ARCHITECT — MICHAEL SHILLAS — No. 5332 — STATE OF CALIFORNIA

Date: 2/23/2024

Date:	FEBRUARY 23, 2024
Drawn By:	MS
Checked By:	MS
Scale:	AS NOTED
Project Number:	107522.001

REVISIONS

No.	Date	Description	Approval

NORTH AVE. HALF PLEXES
905 NORTH AVENUE
SACRAMENTO, CALIFORNIA 95838
PLANTING NOTES AND DETAILS

L3

C:\Users\MICHAE~1\AppData\Local\Temp\AcPublish_5332\L3_1075_PLT_North_Ave.dwg Feb 23, 2024

PLANT LEGEND

TREES

SYMBOL	BOTANICAL/ COMMON NAME	QTY	WATER USE*	MATURE SIZE (HxW)	REMARKS
24" BOX CONTAINERS					
	PISTACIA CHINENSIS 'KEITH DAVEY'/ CHINESE PISTACHE	7	LOW	30'x30'	STANDARD
15 GALLON CONTAINERS					
	CERCIS CANADENSIS 'OAKLAHOMA'/EASTERN REDBUD	3	LOW	20'X20'	STANDARD
	LAGERSTROEMIA 'DYNAMITE'/ CRAPE MYRTLE	6	LOW	18'X18'	STANDARD
	LAURUS NOBILIS/ BAY LAUREL	5	LOW	25'X25'	STANDARD

SHRUBS

SYMBOL	BOTANICAL/ COMMON NAME	QTY	WATER USE*	MATURE SIZE (HxW)	REMARKS
5 GALLON CONTAINERS					
	CISTUS PURPUREUS/ ORCHID ROCKROSE	32	LOW	5'x4'	
	DODONAEA V. 'PURPUREA'/ PURPLE HOPSEED BUSH	35	LOW	8'x8'	
	GARDENIA 'VEITCHII'/ EVERBLOOM GARDENIA	27	MED	4'x4'	
	LOROPETALUM 'PURPLE MAJESTY'/ FRINGE FLOWER	12	MED	6'x6'	
	ROSMARINUS OFFICINALIS TUSCAN BLUE/ROSEMARY	26	LOW	4'x4'	
1 GALLON CONTAINERS					
	CAREX TUMULICOLA/BERKELEY SEDGE	176	LOW	24"x24"	
	DIETES VEGETA/FORTNIGHT LILY	20	LOW	4'x4'	
	LAVANDULA ANGUSTIFOLIA/ ENGLISH LAVENDER	92	LOW	30"x30"	
	MUHLENBERGIA RIGENS/ DEER GRASS	29	LOW	4'x4'	
	NANDINA 'GULF STREAM'/ HEAVENLY BAMBOO	10	LOW	30"x30"	

GRONDCOVER

SYMBOL	BOTANICAL/ COMMON NAME	QTY	WATER USE*	SPACING
5 GALLON CONTAINERS				
	MYOPORUM PARVIFOLIUM/ CREEPING MYOPORUM	112	LOW	48" O.C. SPACING
1 GALLON CONTAINERS				
	LANTANA MONTEVIDENSIS/ TRAILING LANTANA	33	LOW	5' O.C. SPACING

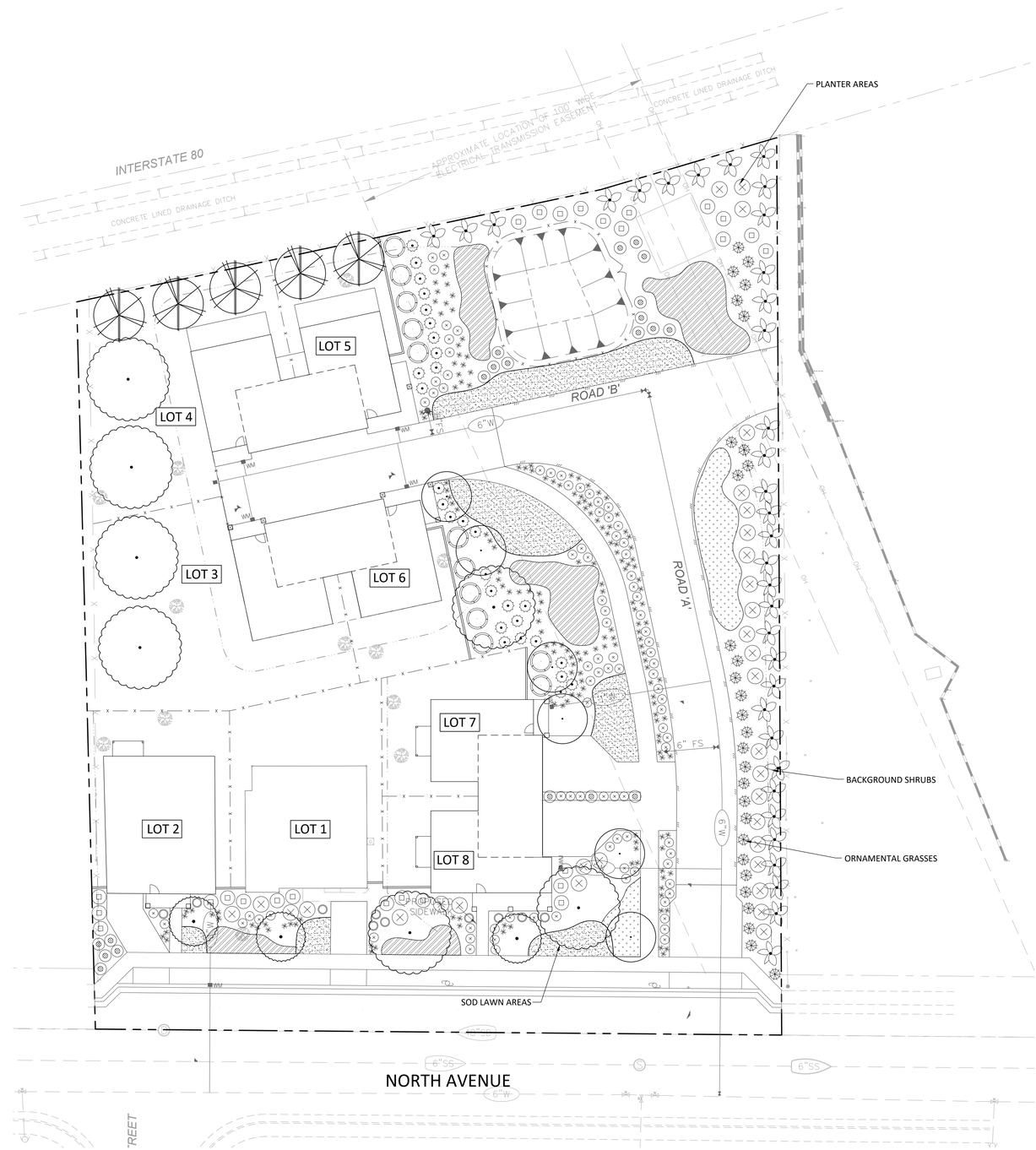

0' 10' 20' 40'
SCALE: 1"=20'-0"

MSLA
LANDSCAPE ARCHITECTURE, Inc.
306 Canyon Falls Dr. - Folsom, CA 95630
916.983.5372 www.msladesign.com

Date: 2/23/2024

Date:	FEBRUARY 23, 2024
Drawn By:	MS
Checked By:	MS
Scale:	AS NOTED
Project Number:	107522.001

REVISIONS

No.	Date	Description	Approval

NORTH AVE. HALF PLEXES
905 NORTH AVENUE
SACRAMENTO, CALIFORNIA 95838
PLANTING PLAN

L4

Sheet 4 of 4

C:\Users\MICHAE~1\AppData\Local\Temp\AcPublish_5332\L3_1075_PLT_North_Ave.dwg Feb 23, 2024

SHEET NOTES:

1. (E) EXISTING
   (N) NEW
   (R) RELOCATED
   (D) DEMO
2. ALL LIGHT FIXTURES/CONTROLS SHOWN ARE (N) U.O.N.
3. ALL UNDERGROUND CONDUIT SHALL BE PVC U.O.N. AND HAVE A MINIMUM BURIAL DEPTH PER CEC TABLE 300.5

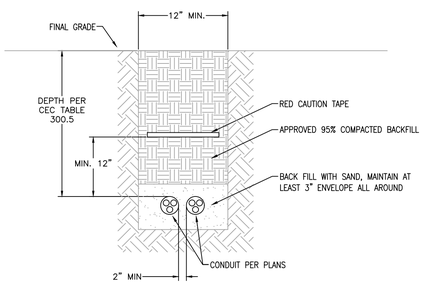

NOTES:
1. BOTTOM OF TRENCH SHALL BE SQUARE AND CLEAN
2. REFER TO PLANS FOR QUANTITY AND SIZES OF CONDUITS
3. SAND SHALL BE FINE GRANULAR MATERIAL, FREE OF ORGANIC MATTER, MICA, LOAM OR CLAY

UNDERGROUND TRENCH DETAIL (1 / CE0)

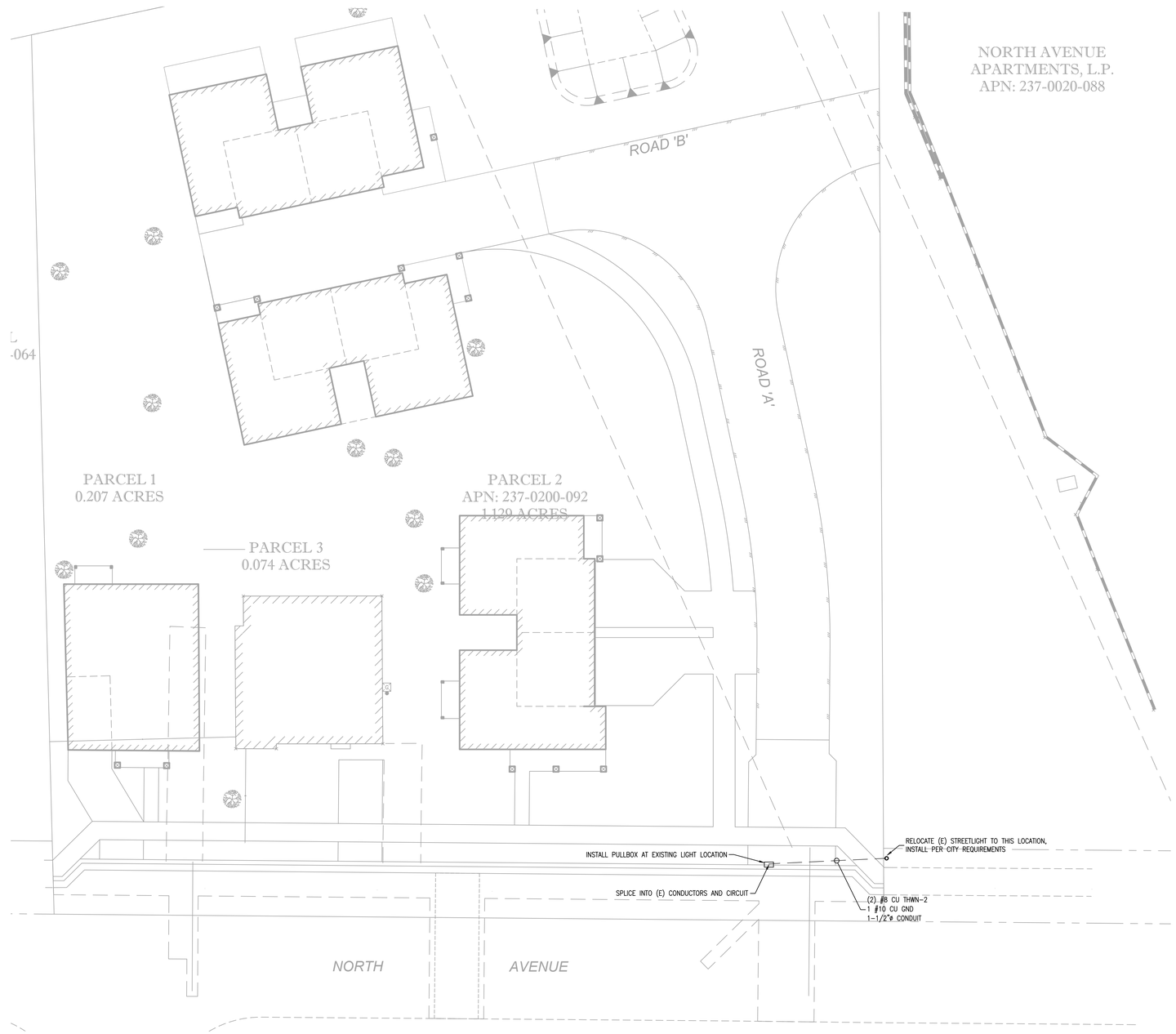

A ELECTRICAL PLAN - OFFSITE POWER
SCALE: 1/16"=1'-0"

NORTH

FOR REFERENCE ONLY

REVISION	DESCRIPTION	DATE

JOB NO. 22161
DRAWN AJN
CHECKED
ORIGINAL DATE 06-06-2022

REGISTERED PROFESSIONAL ENGINEER ALEXANDRE M. BATTISTA No.E23735 EXP.12-31-2023 STATE OF CALIFORNIA

ISSUED FOR	DATE
PERMIT	02-21-2023

OPTIMIZED ENERGY & FACILITIES CONSULTING, INC.™
5734 Lonetree Boulevard, Rocklin, CA 95765
Office: (916) 626 5518 www.oefcinc.com

905 NORTH AVENUE - OFFSITE

905 NORTH AVENUE
SACRAMENTO, CALIFORNIA 95838

SHEET TITLE
ELECTRICAL POWER OFFSITE PLAN

SHEET NO.
CE0

LIGHTING FIXTURE SCHEDULE

TAG	TYPE	MANU.	SERIES	MODEL	QTY.	MOUNTING	VOLT.	WATTAGE	SOURCE	LUMENS	CCT	WEIGHT (LBS)	REMARKS
01	OUTDOOR SCONCE	COOPER	INVUE	ENC-SA1A-740-U-SL2-DP-HSS	4	WALL @10' ABOVE GRADE	120	20.1	LED	2210	4000K	29.1	INSTALL WITH HOUSE SIDE SHIELDS
02	OUTDOOR POLE	COOPER	STREETWORKS	MPB-AF-D-U-SYM	4	POLE @12' ABOVE GRADE	120	58	LED	5096	4000K	34.0	
03	OUTDOOR POLE	COOPER	LUMARK	LDRL-SL2-E02-E-HSS	4	POLE @15' ABOVE GRADE	120	52	LED	5856	4000K	35.0	INSTALL WITH HOUSE SIDE SHIELDS

NOTES: COORDINATE ALL ARCHITECTURAL TRIM AND ACCESSORY OPTIONS WITH OWNER
EQUIVALENT FIXTURES ACCEPTABLE CONTINGENT ON OWNER APPROVAL

LIGHTING ZONE STATISTICS

ZONE	NAME	AVERAGE FC	MAXIMUM FC	MINIMUM FC
A	SHARED DRIVEWAY	1.9	3.9	0.6
B	WALKWAYS	2.3	3.9	0.8
C	ADJACENT RESIDENTIAL PROPERTY	0.0	0.1	0.0

SHEET NOTES:

1. (E) EXISTING
   (N) NEW
   (R) RELOCATED
   (D) DEMO
2. ALL LIGHT FIXTURES/CONTROLS SHOWN ARE (N) U.O.N.
3. ALL POLE MOUNTED LIGHT FIXTURES TO HAVE CONCRETE POLE BASE
4. ALL EXTERIOR LIGHT FIXTURES TO BE CONTROLLED BY PHOTOCONTROL AND AUTOMATIC SCHEDULE CONTROL
5. LIGHT FIXTURES 02 & 03 TO BE CONTROLLED BY MOTION SENSOR CAPABLE OF DIMMING THE FIXTURE BY 50-90%, AND SEPARATELY CAPABLE OF TURNING THE FIXTURE OFF DURING UNOCCUPIED HOURS
6. FIXTURES MOUNTED ON THE BUILDINGS WILL BE UNDER SEPARATE PERMIT AND ARE SHOWN FOR PHOTOMETRIC PURPOSES ONLY

KEY NOTES:

1. FIXTURE 02 IS MOUNTED AT 12' AND IS AT A DISTANCE BETWEEN 1-2 MOUNTING HEIGHTS FROM THE PROPERTY LINE.

   FIXTURE 02 HAS A BUG RATING OF B2-U4-G2, AND HAS A LUMEN OUTPUT LESS THAT 6,200 LUMENS.

   FIXTURE 02 IS EXEMPT FROM CALIFORNIA GREEN BUILDING STANDARDS CODE BUG RATINGS LISTED ON TABLE 5.106.8 PER CALIFORNIA BUILDING ENERGY EFFICIENCY STANDARDS SECTION 130.2(b)

2. FIXTURE 03 IS MOUNTED AT 15' AND IS AT A DISTANCE BETWEEN 1-2 MOUNTING HEIGHTS FROM THE PROPERTY LINE.

   FIXTURE 03 HAS A BUG RATING OF B1-U0-G2, AND HAS A LUMEN OUTPUT LESS THAT 6,200 LUMENS.

   FIXTURE 03 IS EXEMPT FROM CALIFORNIA GREEN BUILDING STANDARDS CODE BUG RATINGS LISTED ON TABLE 5.106.8 PER CALIFORNIA BUILDING ENERGY EFFICIENCY STANDARDS SECTION 130.2(b)

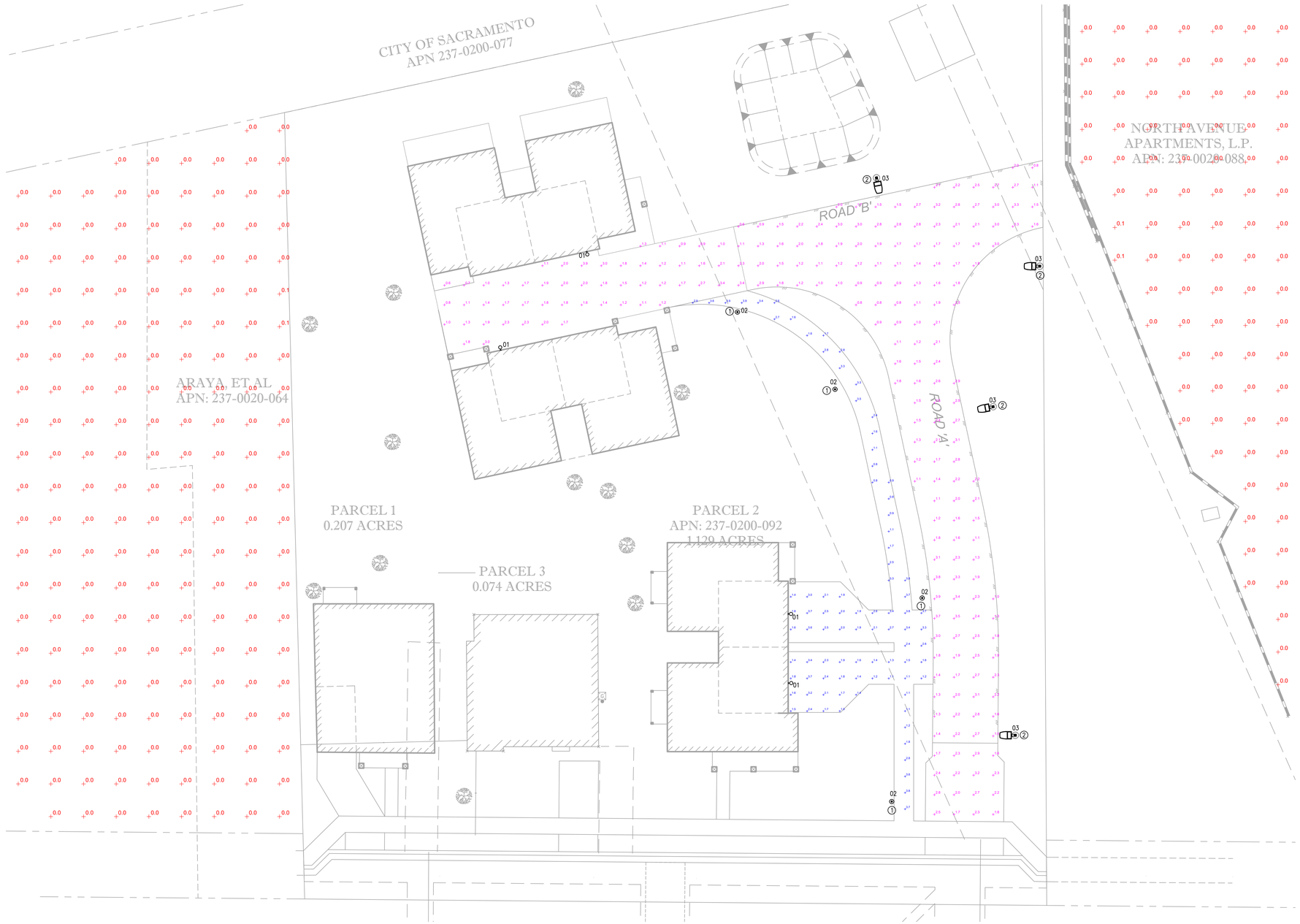

A ELECTRICAL PLAN - SITE PHOTOMETRIC
SCALE: 1/16"=1'-0"

NORTH

REVISION	DESCRIPTION	DATE
1	PC COMMENTS	05-17-2023

JOB NO. 22161
DRAWN AJN
CHECKED
ORIGINAL DATE 06-06-2022

REGISTERED PROFESSIONAL ENGINEER ALEANDRE M. BATISTA No.E23735 EXP.12-31-2023 STATE OF CALIFORNIA

ISSUED FOR: PERMIT
DATE: 05-23-2023

OPTIMIZED ENERGY & FACILITIES CONSULTING, INC.
5734 Lonetree Boulevard, Rocklin, CA 95765
Office: (916) 626 5518 www.oefcinc.com

905 NORTH AVENUE

905 NORTH AVENUE
SACRAMENTO, CALIFORNIA 95838

SHEET TITLE: PHOTOMETRIC SITE PLAN

SHEET NO. E0

NEW SERVICE - SINGLE LINE DIAGRAM

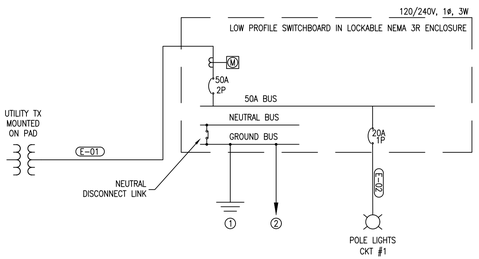

ONE-LINE NOTES:

1. (N) – NEW
   (E) – EXISTING
   (R) – REPLACED
   (F) – FUTURE
2. ALL EQUIPMENT/WIRING IS (N) U.O.N.
3. ALL WIRING INSULATION SHALL BE THWN-2, U.O.N.
4. THE SERVICE DISCONNECT SHALL BE PERMANENTLY MARKED PER CEC 230.70(B)
5. POST A DATED AVAILABLE FAULT CURRENT CALCULATION AT THE SERVICE EQUIPMENT PER CEC 110.24
6. SWITCHBOARDS, PANELBOARDS, INDUSTRIAL CONTROLS PANELS, ETC. SHALL BE FIELD OR FACTORY MARKED TO WARN QUALIFIED PERSONS OF POTENTIAL ELECTRIC ARC FLASH HAZARDS. MARKING SHALL MEET 110.21(B) AND BE CLEARLY VISIBLE PER CEC 110.16

ONE-LINE KEY NOTES:

1. GROUND ELECTRODE SYSTEM: MINIMUM #8 AWG CU GEC CONNECTED TO GROUND ELECTRODE PER CEC 250.52(A), AND WHERE NOT EXPOSED TO PHYSICAL DAMAGE, A BARE #6, OR LARGER, CU GEC SHALL BE PERMITTED PER CEC 250.64
2. MINIMUM #8 BARE COPPER BOND TO METAL FRAMING AND METAL PIPING

LOAD CALC FOR SERVICE:
(N) SITE LIGHTING = 520.4 VA
520.4 VA/120V = 4.34A
4.34AX1.25 = 5.42A<20A

FEEDER SCHEDULE

TAG	# OF SETS	CONDUIT (PER SET)	CONDUCTORS (PER SET)		REMARKS
			PHASE/NEUTRAL	GROUND	
E-01	1	1"ø	(3) #8 AWG CU	–	–
E-02	1	1"ø	(2) #10 AWG CU	(1) #10 AWG CU	–

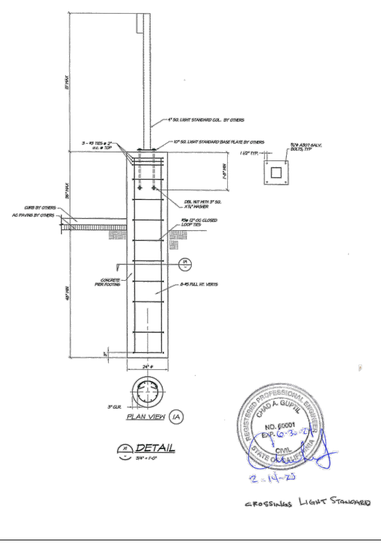

POLE LIGHT MOUNTING 1 / E1

SHEET NOTES:

1. (E) EXISTING
   (N) NEW
   (R) RELOCATED
   (D) DEMO
2. ALL LIGHT FIXTURES/CONTROLS SHOWN ARE (N) U.O.N.
3. ALL WIRING TO BE #12 AWG CU AND ALL CONDUIT TO BE 1" U.O.N.
4. ALL POLE MOUNTED LIGHT FIXTURES TO HAVE CONCRETE POLE BASE
5. ALL UNDERGROUND CONDUIT SHALL BE PVC U.O.N. AND HAVE A MINIMUM BURIAL DEPTH PER CEC TABLE 300.5
6. FIXTURES MOUNTED ON THE BUILDINGS WILL BE UNDER SEPARATE PERMIT AND ARE SHOWN FOR PHOTOMETRIC PURPOSES ONLY

KEY NOTES:

1. BUILDING MOUNTED LIGHTING TO BE POWERED FROM BUILDING PANEL

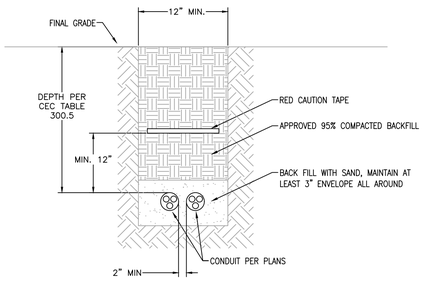

NOTES:
1. BOTTOM OF TRENCH SHALL BE SQUARE AND CLEAN
2. REFER TO PLANS FOR QUANTITY AND SIZES OF CONDUITS
3. SAND SHALL BE FINE GRANULAR MATERIAL, FREE OF ORGANIC MATTER, MICA, LOAM OR CLAY

UNDERGROUND TRENCH DETAIL 2 / E1

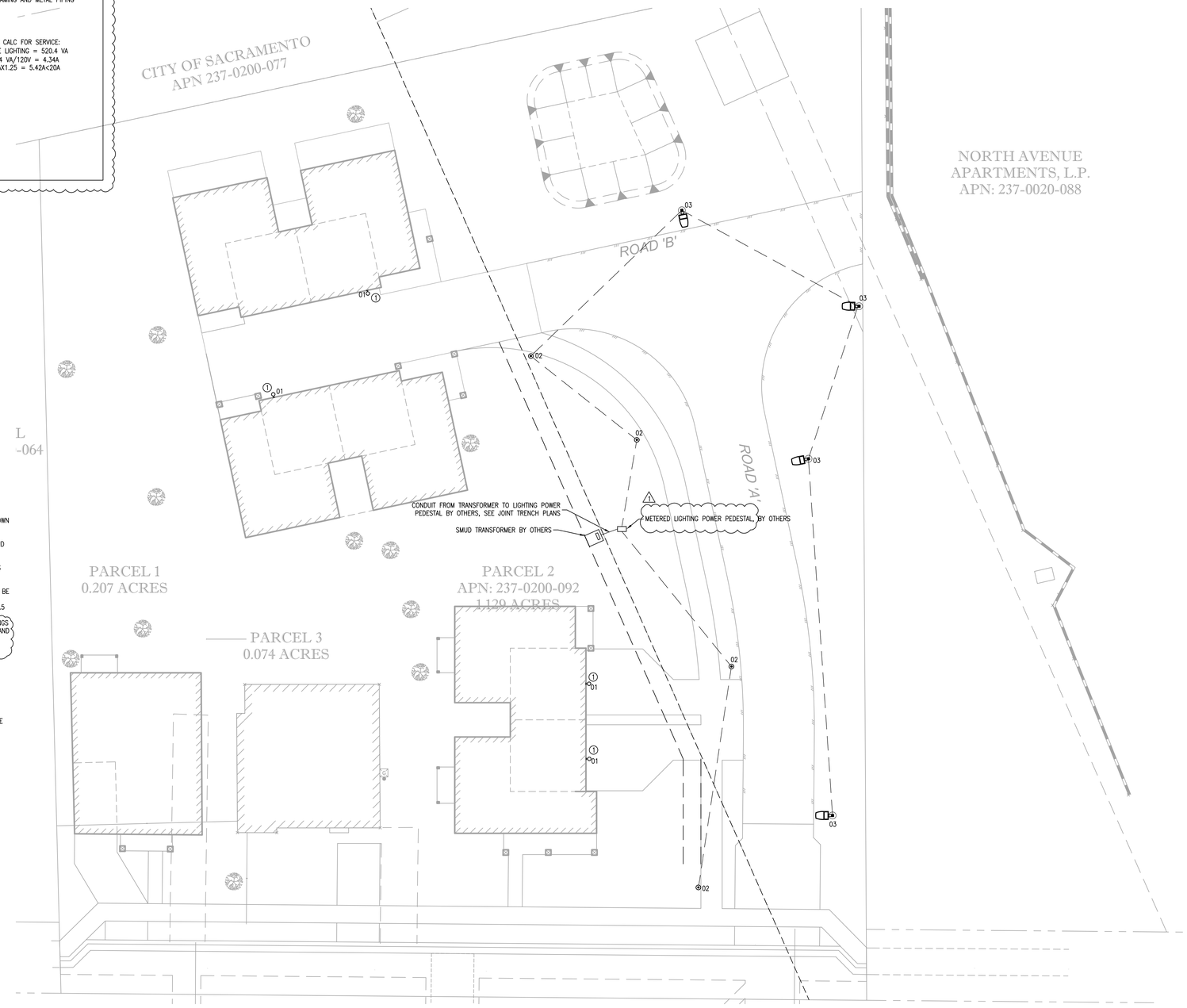

A ELECTRICAL PLAN - SITE POWER
SCALE: 1/16"=1'-0"

NORTH

REVISION	DESCRIPTION	DATE
1	PC COMMENTS	05-17-2023

JOB NO. 22161
DRAWN AJN
CHECKED
ORIGINAL DATE 06-06-2022

REGISTERED PROFESSIONAL ENGINEER ALEXANDRE M. BATTISTI No.E23735 EXP.12-31-2023 STATE OF CALIFORNIA

ISSUED FOR: PERMIT
DATE: 05-23-2023

OPTIMIZED ENERGY & FACILITIES CONSULTING, INC.
5734 Lonetree Boulevard, Rocklin, CA 95765
Office: (916) 626 5518 www.oefcinc.com

905 NORTH AVENUE
905 NORTH AVENUE
SACRAMENTO, CALIFORNIA 95838

SHEET TITLE
ELECTRICAL POWER SITE PLAN

SHEET NO.
E1

STATE OF CALIFORNIA
Outdoor Lighting
NRCC-LTO-E — CALIFORNIA ENERGY COMMISSION

CERTIFICATE OF COMPLIANCE			NRCC-LTO-E
Project Name:	905 North Avenue	Report Page:	(Page 1 of 7)
Project Address:	905 North Avenue	Date Prepared:	6/2/2022

A. GENERAL INFORMATION

01	Project Location (city)	Sacramento	04 Total Illuminated Hardscape Area (ft²)	11090
02	Climate Zone	12		
03	Outdoor Lighting Zone per Title 24 Part 1 §10.114 or as designated by Authority Having Jurisdiction (AHJ):			
☐	LZ-0: Very Low - Undeveloped Parkland	☐ LZ-2: Moderate - Rural Areas	☐ LZ-4: High - Must be reviewed by CA Energy Commission for Approval	
☐	LZ-1: Low - Developed Parkland	☒ LZ-3: Moderately High - Urban Areas		

B. PROJECT SCOPE

This table includes outdoor lighting systems that are within the scope of the permit application and are demonstrating compliance using the prescriptive path outlined in §140.7 or §141.0(b)2L for alterations.

My Project Consists of:

01	02
☒ New Lighting System	Must Comply with Allowances from §140.7
☐ Altered Lighting System	Is your alteration increasing the connected lighting load (Watts)? ◯ Yes ◯ No

03	04	05
% of Existing Luminaires Being Altered[1]	Sum Total of Luminaires Being Added or Altered	Calculation Method
☐ < 10% ☐ >= 10% and < 50% ☐ >= 50%		

Please proceed to Table F. Outdoor Lighting Fixture Schedule to define the project's luminaires.

[1] FOOTNOTES: % of Existing Luminaires Being Altered = (Sum Total of Luminaires Being Added or Altered / Existing Luminaires within the Scope of the Permit Application) x 100.

C. COMPLIANCE RESULTS

Results in this table are automatically calculated from data input and calculations in Tables F through I. Note: If any cell on this table says "COMPLIES with Exceptional Conditions" refer to Table D. Exceptional Conditions for guidance or see applicable Table referenced below.

Calculations of Total Allowed Lighting Power (Watts) §140.7 or §141.0(b)2L											Compliance Results		
01		02		03		04		05		06	07		08	09
General Hardscape Allowance §140.7(d)1 (See Table I)	+	Per Application §140.7(d)2 (See Table J)	+	Sales Frontage §140.7(d)2 (See Table K)	+	Ornamental §140.7(d)2 (See Table L)	+	Per Specific Area §140.7(d)2 (See Table M)	OR	Existing Power Allowance §141.0(b)2L (See Table N)	= **Total Allowed** (Watts)	≥	**Total Actual** (Watts)	**07 must be >= 08**
1,061.69	+	---	+	---	+	---	+	---	OR	---	= 1,061.69	≥	520.4	COMPLIES
Cutoff Compliance (See Table G for Details)														N/A
Controls Compliance (See Table H for Details)														COMPLIES

D. EXCEPTIONAL CONDITIONS

This table is auto-filled with uneditable comments because of selections made or data entered in tables throughout the form.

E. ADDITIONAL REMARKS

This table includes remarks made by the permit applicant to the Authority Having Jurisdiction.

See plan sheet E0

F. OUTDOOR LIGHTING FIXTURE SCHEDULE

For new or altered lighting systems demonstrating compliance with §140.7 all new luminaires being installed and any existing luminaires remaining or being moved within the spaces covered by the permit application are included in the Table below. For altered lighting systems using the Existing Power method per §141.0(b)2L only new luminaires being installed and replacement luminaires being installed as part of the project scope are included (ie, existing luminaires remaining or existing luminaires being moved are not included).

Designed Wattage:

01	02		03	04	05	06	07	08	09	10	
Name or Item Tag	Complete Luminaire Description		Watts per luminaire[1,2]	How is Wattage determined	Total number luminaires[3]	Luminaire Status[3]	Excluded per §140.7(a)	Design Watts	Cutoff Req. -> 6,200 initial lumen output §130.2(b)[4]	Field Inspector Pass	Field Inspector Fail
O1	O1	☐ Linear	20.1	Mfr. Spec	4	New	☐	80.4	NA: < 6200 lumens	☐	☐
O2	O2	☐ Linear	58	Mfr. Spec	4	New	☐	232	NA: < 6200 lumens	☐	☐
O3	O3	☐ Linear	52	Mfr. Spec	4	New	☐	208	NA: < 6200 lumens	☐	☐
							Total Design Watts:	520.4			

* NOTES: Selections with a * require a note in the space below explaining how compliance is achieved.
EX: Luminaire is lighting a statue; EXCEPTION 1 to §130.2(b)

[1] FOOTNOTES: Authority Having Jurisdiction may ask for Luminaire cut sheets to confirm wattage used for compliance per §130.0(c)
[2] For linear luminaires, wattage should be indicated as W/lf instead of Watts/luminaire. Total linear feet should be indicated in column 05 instead of number of luminaires.
[3] Select "New" for new luminaires in a new outdoor lighting project, or for added luminaires in an alteration. Select "Altered" for replacement luminaires in an alteration. Select "Existing to Remain" for existing luminaires within the project scope that are not being altered and are remaining. Select "Existing Reinstalled" for existing luminaires which are being removed and reinstalled as part of the project scope.
[4] Compliance with mandatory cutoff requirements is required for luminaires with initial lumen output >= 6,200 unless exempted by §130.2(b)

G. CUTOFF REQUIREMENTS (BUG)

This section does not apply to this project.

H. OUTDOOR LIGHTING CONTROLS

This table demonstrates compliance with controls requirements for all new or altered luminaires installed as part of the permit application. For alteration projects, luminaires which are existing to remain (ie untouched) and luminaires which are removed and reinstalled (wiring only) do not need to be included in this table even if they are within the spaces covered by the permit application.
*When an option having a * is selected, the notes section of this table must be completed. The lighting controls section of the Compliance Summary Table on the first page will show "DOES NOT COMPLY" if the notes are left blank.*

Mandatory Controls

01	02	03	04	05	
Area Description	Shut-Off §130.2(c)1	Auto-Schedule §130.2(c)2	Motion Sensor §130.2(c)3	Field Inspector Pass	Field Inspector Fail
Walkways	Photocontrol	Yes	Yes	☐	☐
Driveways	Photocontrol	Yes	Yes	☐	☐

** NOTES: Controls with a * require a note in the space below explaining how compliance is achieved.*
EX: Not permitted by health & safety to be turned off; EXCEPTION 1 to §130.2(c)

I. LIGHTING POWER ALLOWANCE (per §140.7)

This table includes areas using allowance calculations per §140.7. General Hardscape Allowance is per Table 140.7-A while "Use it or lose it" Allowances are per Table 140.7-B . Indicate which allowances are being used to expand sections for user input. Luminaires that qualify for one of the "Use it or lose it" allowances shall not qualify for another "Use it or lose it" allowance.

01				
☒ General Hardscape Allowance Table I (below)	"Use it or lose it" Allowance (select all that apply) (select all that apply)			
	☐ Per Application Table J	☐ Sales Frontage Table K	☐ Ornamental Table L	☐ Per Specific Area Table M

Calculated General Hardscape Lighting Power Allowance per Table 140.7-A (LZ 0, 1 & 4)

Calculated General Hardscape Lighting Power Allowance per Table 140.7-A (LZ 2 & 3)

02	03	04	05	06	07	08	09	10
Area Description	Surface Type	Area Wattage Allowance (AWA)			Area Wattage Allowance (AWA)			Total General AWA + LWA (Watts)
		Illuminated Area (ft²)	Allowed Density (W/ft²)	Area Allowance (Watts)	Perimeter Length (lf)	Allowed Density (W/lf)	Linear Allowance (Watts)	
Walkways	Concrete	3058	0.03	91.7	581	0.4	232.4	324
Driveway	Asphalt	8032	0.025	200.8	747	0.2	186.8	388
							Initial Wattage Allowance for Entire Site (Watts):	350
							Total General Hardscape Allowance (Watts):	1062

J. LIGHTING ALLOWANCE: PER APPLICATION

This section does not apply to this project.

K. LIGHTING ALLOWANCE: SALES FRONTAGE

This section does not apply to this project.

L. LIGHTING ALLOWANCE: ORNAMENTAL

This section does not apply to this project.

M. LIGHTING ALLOWANCE: PER SPECIFIC AREA

This section does not apply to this project.

N. EXISTING CONDITIONS POWER ALLOWANCE (alterations only)

This section does not apply to this project.

O. DECLARATION OF REQUIRED CERTIFICATES OF INSTALLATION

Selections have been made based on information provided in this document. If any selection have been changed by permit applicant, an explanation should be included in Table E. Additional Remarks. These documents must be provided to the building inspector during construction and can be found online at https://www.energy.ca.gov/title24/2019standards/2019_compliance_documents/Nonresidential_Documents/NRCI/

Form/Title	Field Inspector Pass	Field Inspector Fail
NRCI-LTO-01-E - Must be submitted for all buildings	☐	☐
NRCI-LTO-02-E- Must be submitted for a lighting control system, or for an Energy Management Control System (EMCS), to be recognized for compliance.	☐	☐

P. DECLARATION OF REQUIRED CERTIFICATES OF ACCEPTANCE

Selections have been made based on information provided in this document. If any selection have been changed by permit applicant, an explanation should be included in Table E. Additional Remarks. These documents must be provided to the building inspector during construction and must be completed through an Acceptance Test Technician Certification Provider (ATTCP). For more information visit: http://www.energy.ca.gov/title24/attcp/providers.html

Form/Title	Systems/Spaces To Be Field Verified		Field Inspector Pass	Field Inspector Fail
NRCA-LTO-02-A - Must be submitted for all outdoor lighting controls except for alterations where controls are added to <= 20 luminaires.	☐	☐		

DOCUMENTATION AUTHOR'S DECLARATION STATEMENT

I certify that this Certificate of Compliance documentation is accurate and complete.

Documentation Author Name: Alex Batista	Documentation Author Signature:
Company: Optimized Energy & Facilities Consulting	Signature Date: 2022-06-02
Address: 5734 Lonetree Blvd	CEA/ HERS Certification Identification (if applicable):
City/State/Zip: Rocklin CA 95765	Phone: (916) 626-5518

RESPONSIBLE PERSON'S DECLARATION STATEMENT

I certify the following under penalty of perjury, under the laws of the State of California:

1. The information provided on this Certificate of Compliance is true and correct.
2. I am eligible under Division 3 of the Business and Professions Code to accept responsibility for the building design or system design identified on this Certificate of Compliance (responsible designer)
3. The energy features and performance specifications, materials, components, and manufactured devices for the building design or system design identified on this Certificate of Compliance conform to the requirements of Title 24, Part 1 and Part 6 of the California Code of Regulations.
4. The building design features or system design features identified on this Certificate of Compliance are consistent with the information provided on other applicable compliance documents, worksheets, calculations, plans and specifications submitted to the enforcement agency for approval with this building permit application.
5. I will ensure that a completed signed copy of this Certificate of Compliance shall be made available with the building permit(s) issued for the building, and made available to the enforcement agency for all applicable inspections. I understand that a completed signed copy of this Certificate of Compliance is required to be included with the documentation the builder provides to the building owner at occupancy.

Responsible Designer Name: Alex Batista	Responsible Designer Signature:
Company: Optimized Energy & Facilities Consulting, Inc	Date Signed: 2022-06-02
Address: 5734 Lonetree Blvd	License: 623735
City/State/Zip: Rocklin CA 95765	Phone: (916) 626-5518

REVISION	DESCRIPTION	DATE
1	PC COMMENTS	05-17-2023

JOB NO. 22161 | DRAWN AJN | CHECKED | ORIGINAL DATE 06-06-2022

REGISTERED PROFESSIONAL ENGINEER ALEXANDRE M. BATISTA No.E23735 EXP.12-31-2023 STATE OF CALIFORNIA

ISSUED FOR: PERMIT | DATE: 05-23-2023

OPTIMIZED ENERGY & FACILITIES CONSULTING, INC.
5734 Lonetree Boulevard, Rocklin, CA 95765
Office: (916) 626 5518 www.oefcinc.com

905 NORTH AVENUE
905 NORTH AVENUE
SACRAMENTO, CALIFORNIA 95838

SHEET TITLE: SITE LIGHTING ENERGY REPORT

SHEET NO. EN0